MPL IMI

203 N. Edgerton Street | PO Box 220| Fairland, Indiana 46126

MADE IN THE USA

Phone (317) 835-9000
mplcompany.net

6" × 6" Footrest

Specifications

- **Model**: 6 × 6 Foot Rest
- **Size**: 6" × 6"
- **Height**: 12 ½"
- **Separate Support Legs Thickness**: ½", 1" Thick
- **Mounts to**: Corner of wall Glossy or Matte finish
- **Material**: Cultured Marble
- **Weight**: 5 lbs

Image Coming Soon

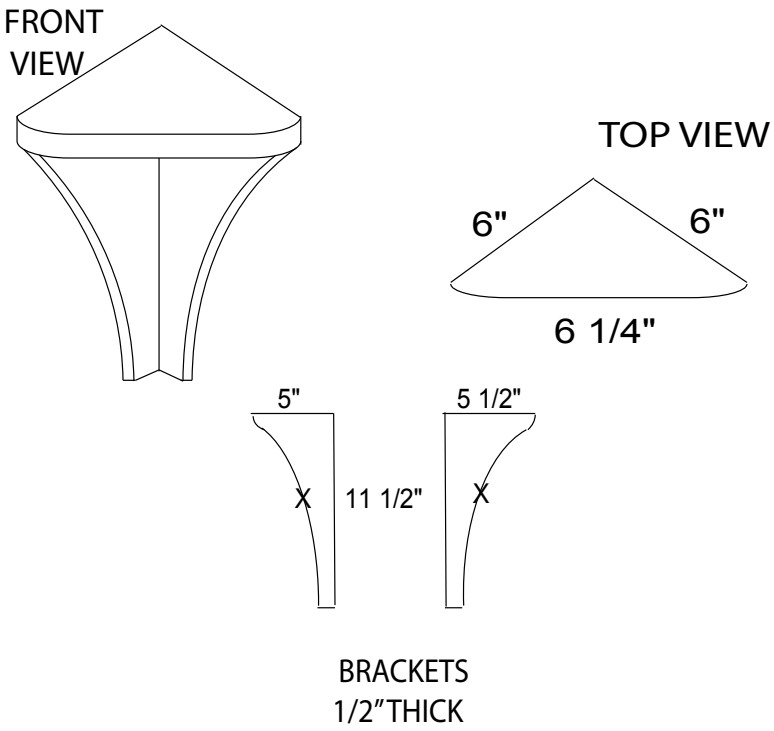

Standard Features

- Wall Mount
- Permanently Sealed Surface
- Extremely Sanitary
- Waterproof and Leak Proof
- Bacteria Resistant
- Easy to Install
- Maintenance Free