MPL IMI

203 N. Edgerton Street | PO Box 220| Fairland, Indiana 46126

MADE IN THE USA

Phone (317) 835-9000
mplcompany.net

15" Footrest



Specifications

- **Model**: 15" Foot Rest
- **Size**: 15"
- **Finish**: Glossy or Matte Textured; Non-Slip Finish
- **Thickness**: 1 ⅜" ±⅛"
- **Material**: Cultured Marble
- **Pre-Drilled Mounting Holes**:
  Includes: 3 - 10 SS Truss Head Sheet Metal Screws to be Used With Blocking
  Option: 3 - Anchors/Fasteners - Use When Blocking is Unavailable

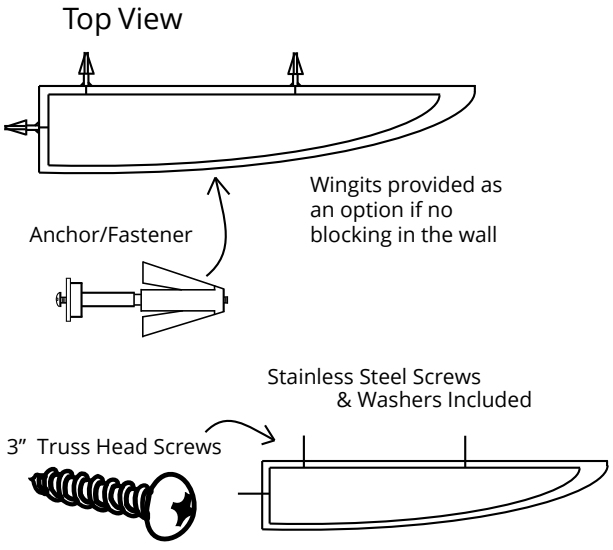

Standard Features

- Permanently Sealed Surface
- Extremely Sanitary
- Waterproof and Leak Proof
- Bacteria Resistant
- Easy to Install
- Maintenance Free

