MPL IMI

203 N. Edgerton Street | PO Box 220| Fairland, Indiana 46126

Phone (317) 835-9000
mplcompany.net

MADE IN THE USA

6 ¾" Corner Mount Ceramic Soap Dish



Specifications

- **Model**:
  RS-IMI-ACC-SD-C6.75-SW (White);
  RS-IMI-ACC-SD-C6.75-SB (Bisque);
  RS-IMI-ACC-SD-C6.75-SA (Almond)
- **Type**: Corner Mount
- **Material**: Cultured Marble
- **Size**: 6 ¾" × 6 ¾"
- **Height**: 2 ⅜"
- **Color Options**: White, Bisque, Almond

TOP VIEW

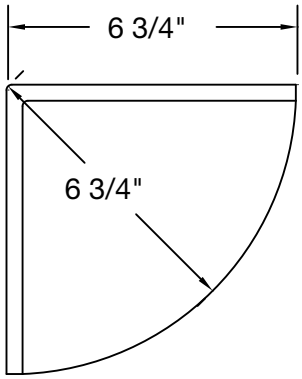

Standard Features

- Corner Wall Mount
- Permanently Sealed Surface
- Extremely Sanitary
- Waterproof and Leak Proof
- Bacteria Resistant
- Easy to Install
- Maintenance Free

SIDE VIEW

