MPL IMI

203 N. Edgerton Street | PO Box 220| Fairland, Indiana 46126

MADE IN THE USA

Phone (317) 835-9000
mplcompany.net

Trim Strips
96" × 2" × ¾"
120" × 2" × ¾"

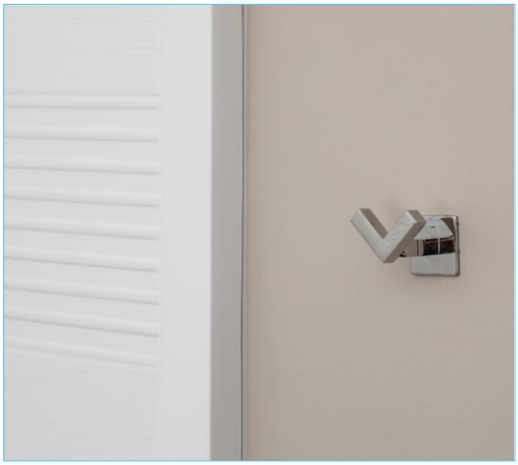

Specifications

- **Model**: Trim Strip ¾"
- **Size**: Up to 96" or 120" Long × 2" Wide
- **Thickness**: ¾"
- **Edges**: Radius Edges
- **Finish**: Glossy or Matte
- **Material**: Cultured Marble
- **Weight**: Approx. 8 lbs

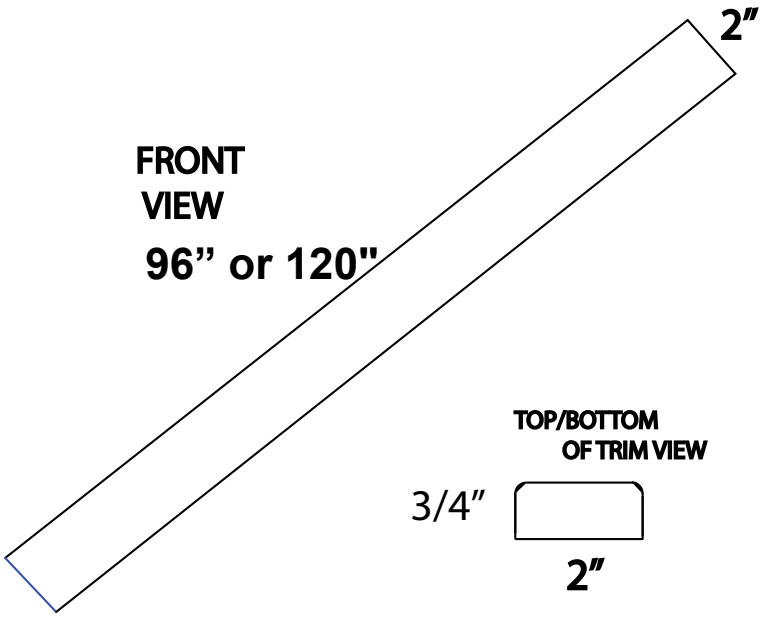

Standard Features

- Permanently Sealed Surface
- Extremely Sanitary
- Waterproof and Leak Proof
- Bacteria Resistant
- Easy to Install
- Maintenance Free