MPL IMI

203 N. Edgerton Street | PO Box 220| Fairland, Indiana 46126

MADE IN THE USA

Phone (317) 835-9000
mplcompany.net

Trim Strips
96" × 2 ⅛" × 1 ¼"

Specifications

- **Model**: Trim Strip 1 ¼"
- **Size**: Up to 120" Long × 2 ⅛" Wide
- **Thickness**: 1 ¼"
- **Edges**: Radius Edges
- **Finish**: Gloss or Matte
- **Material**: Cultured Marble
- **Weight**: 8 lbs

Image Coming Soon

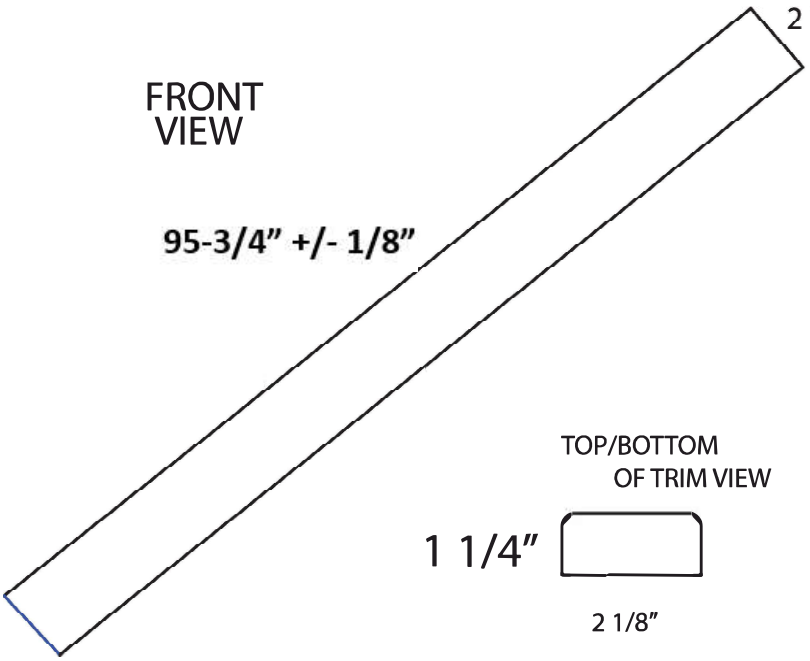

Standard Features

- Permanently Sealed Surface
- Extremely Sanitary
- Waterproof adn Leak Proof
- Bacteria Resistant
- Easy to Install
- Maintenance Free