MPL IMI

203 N. Edgerton Street | PO Box 220| Fairland, Indiana 46126

Phone (317) 835-9000
mplcompany.net

MADE IN THE USA

8" × 6" Corner Soap Basket



Specifications and Standard Features

- **Model**: #RS-20018
- **Type**: Corner Mount
- **Finish**: Matte Black
- **Size**: 8" × 6"
- **Height**: 1.75"
- **Includes**: Mounting Hardware–Stainless Steel Mounting Screws (2), Silicon Washers and Spacers (2), and Wall Anchors (2)
- Easy to Clean
- Easy to Install

TOP VIEW

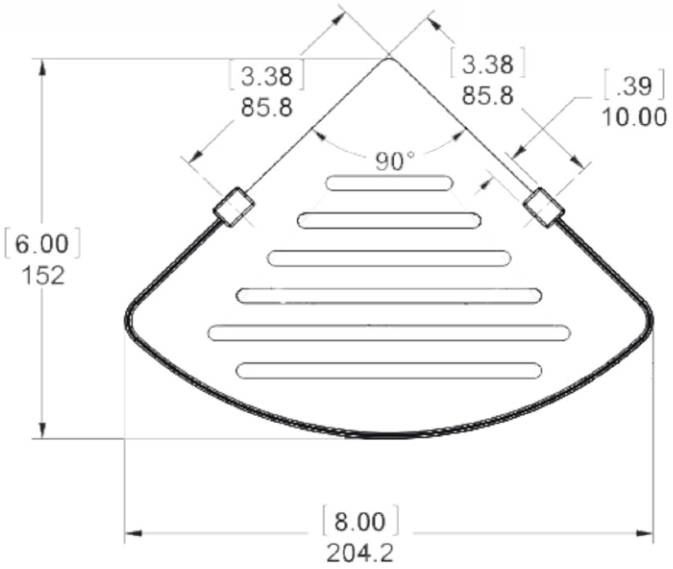

FRONT VIEW

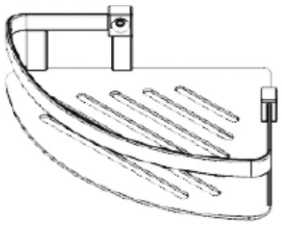

Drill two holes to line up with the above measurements. Attach using the stainless steel wood screws. Silicon washers help secure the shelf to any type of surface material.

SIDE VIEW

