Shower Pan
Installation Instructions

Tools you might need for proper installation

- Screws
- Levels
- Shims
- Tape Measure

Thank you for purchasing Praxis Bathware. For best results, please read and follow all directions carefully.

PRE-INSTALLATION PLANNING

1. Review *Figures 5 and 6*. Make sure alcove is of proper size. Framing alcove must reflect interior dimensions on diagram to permit installation of unit. *Note in diagram the required opening in the floor to provide clearance for the drain trap and fitting connection.*

2. Before installation, carefully inspect the shower pan for damage or defects. If any are noted, please contact the dealer where you purchased the shower pan before proceeding with installation.

3. Wall board with water resistant finished material such as ceramic tile must be installed to complete the shower enclosure. Plan for use of these materials. *(See Figure 4 for more details)*

INSTALLATION PROCEDURE

1. Make certain your recessed framed pocket is square and plumb in accordance with rough-in dimensions. Dimensions shown in *Framing Diagram Figure 6* is 1/8" wider than the unit to provide "Wiggle Room".

2. Finish rough plumbing, but leave unstrapped at this stage. Find drain line and trap locations as shown in *Figure 4*.

3. Install drain fitting on shower base. Pry the strainer plate off the drain body. Disassemble the locknut and two gaskets. Apply a thick bead of 100% silicone caulking to the drain hole area in the shower and insert the drain body. Install the rubber washer and locknut in that order. (*See Figure 2*).

Figure 1

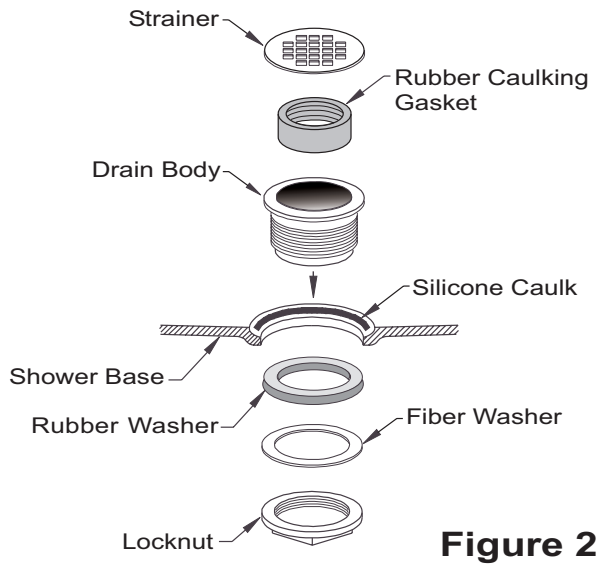

Figure 2

Tighten the locknut. Wipe away excess caulking from the finished side that has squeezed from the fitting before it cures.

4. Remove the rubber caulking gasket. This will permit the 2" waste pipe to slip into the drain assembly when the shower base is lowered into place. (If using a solvent weld drain, omit this step). If installing the shower base over a basement or crawl space, the waste pipe may be installed after the shower is placed in the framed pocket.

5. Shims are recommended. Once the framing pocket is complete, and drain fitting installed, the next step is to determine the location of the wood shims that must be placed under the back edge of the shower.

6. Trial level the pan outside the framing pocket to determine the location of the wood shims. On a flat surface, level the shower pan in two directions: Place the level on top of the threshold, and along the finished flat sides. Install the wood shims under the board along the back edge of the shower. Slide the shims until the shower pan sits solid, plumb and level in both directions. Draw a pencil line along the front edge of the threshold. Then mark the location of the shims. Set the pan aside. Using these marks as reference, transfer the location of the shims to the framing pocket. Secure the shims to the sub floor with fasteners or panel adhesive so they will not shift.

7. Now move shower pan into place. Position the unit at the open end of the framed pocket. Align the lower edge of the apron in approximate position and tilt back into place. Carefully guide the drain pipe though the shower drain assembly. Lower until the shower pan contacts the wood shims secured to the sub floor. *(See Figure 3)*

8. Repeat the leveling process as performed in the trial fit. Place the level along the top of the threshold, and along the finished surface on each side. If any adjustments are required, remove the pan and shift the shims accordingly.

9. When satisfied with the fit, pre-drill a 1/8" hole through the mounting flanges into each framing stud. Carefully counter-sink these holes. Mount the shower pan to the studs using galvanized screws.

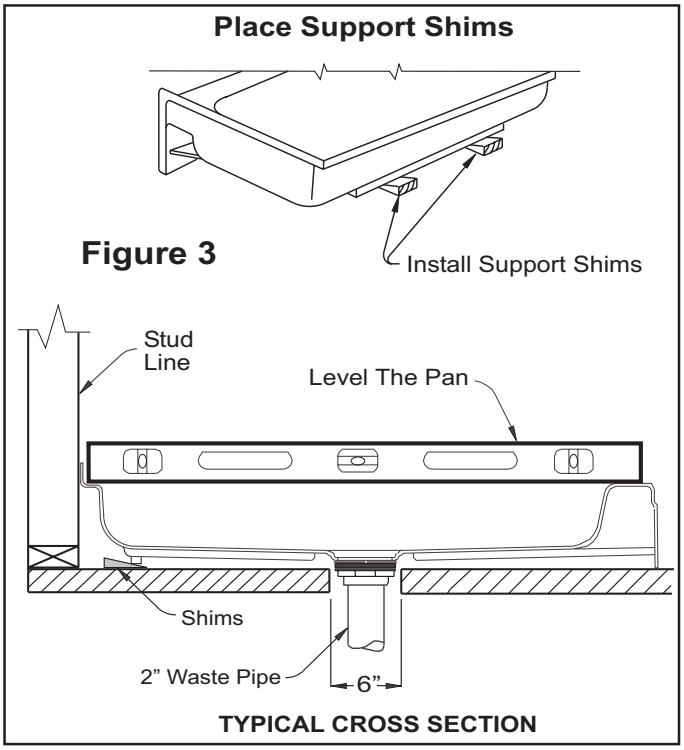

Figure 3

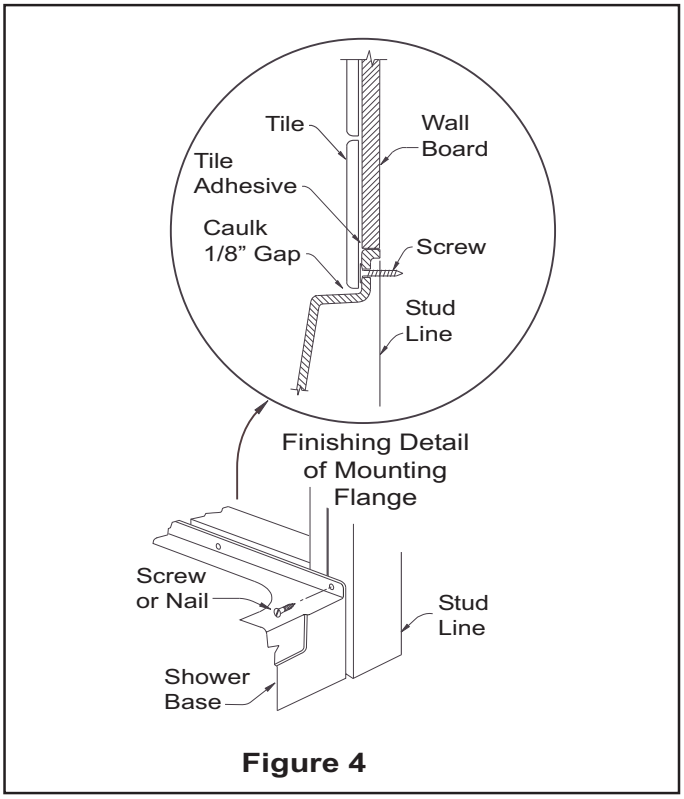

Figure 4

10. Finish installation of the drain pipe into the shower drain assembly. If necessary, trim the pipe length. Use soap to lubricate the rubber caulking gasket. Slip the gasket around the pipe and push down until it seats in the drain body. Snap on the strainer plate to complete the installation. *NOTE: Praxis Companies is not responsible for leaking drain connections. Proper installation of the drain assembly and pipe is installers responsibility.*

11. Finish wall materials above the shower pan is of owners or installers preference. The diagram in *Figure 4* details an example of a typical wall enclosure. In this example, a thin wood strip is attached to each framing stud above the shower mounting flange. This will allow the wall board to be installed plumb and slip down over to cover the mounting flange and mounting screws. (Using the wood strips is optional, however wall board should always cover the mounting flanges). Leave a 1/8" gap between the bottom edge of the wall board and the finished surface of the shower pan. Caulk this gap.

CARE AND CLEANING

DO NOT USE ABRASIVE CLEANERS. The most important caution is to avoid use of harsh abrasive cleaners or gritty scouring powders. To clean the unit, simply use a household liquid detergent with soft sponge cloth and warm water. More persistent stains, tar, or paint can be removed with naptha or mineral spirits. Remove excess plaster by scraping with a sharpened soft wood stick. Avoid wire brushes, metal scrapers or tools. Restore dull areas by rubbing with automotive type body cleaning compound.

LIMITED WARRANTY

Units manufactured of fiberglass reinforced polyester resin, that it will, free of charge, repair or exchange as its option, any Praxis Companies unit found to be defective in materials or workmanship upon inspection by an authorized representative of Praxis Companies for a period of three (3) years from date of purchase for Gelcoat faced units, Five (5) for Acrylic faced units and Ten (10) for Solid Surface units. The exchange of a unit is limited to supplying a replacement unit of comparable size and style and does not include any costs of removal or installation. This warranty shall be voided if the unit is moved from its place of initial installation or is not installed in accordance with the instructions supplied by the manufacturer of the unit. Further, this warranty does not apply if the unit has been subjected to accident, abuse, misuse, damage caused by flood, fire or act of God. Since local code requirements vary greatly throughout the country, distributors, dealers, installation contractors and users of plumbing products should determine whether there are any code restrictions on the use of a specific product. Praxis Companies makes no representation or warranty regarding and shall not be responsible for any code compliance. The owner agrees by use of this unit that the obligations of Praxis Companies shall not exceed to contingent or indirect damage or injury to the structure of its contents, that the obligations of Praxis Companies are limited to those set forth herin, and that no other obligations, expressed or implied, are assumed by Praxis Companies.

Contact: Praxis Companies Warranty Department
(800) 443-7269 Ext: 130 gyoung@praxiscompanies.com

© 2015, The Praxis Companies, LLC
435 Industrial Rd., Savannah, TN 38372
Customer Service: 800.443.7269
www.praxiscompanies.com

FRAMING DIMENSIONS

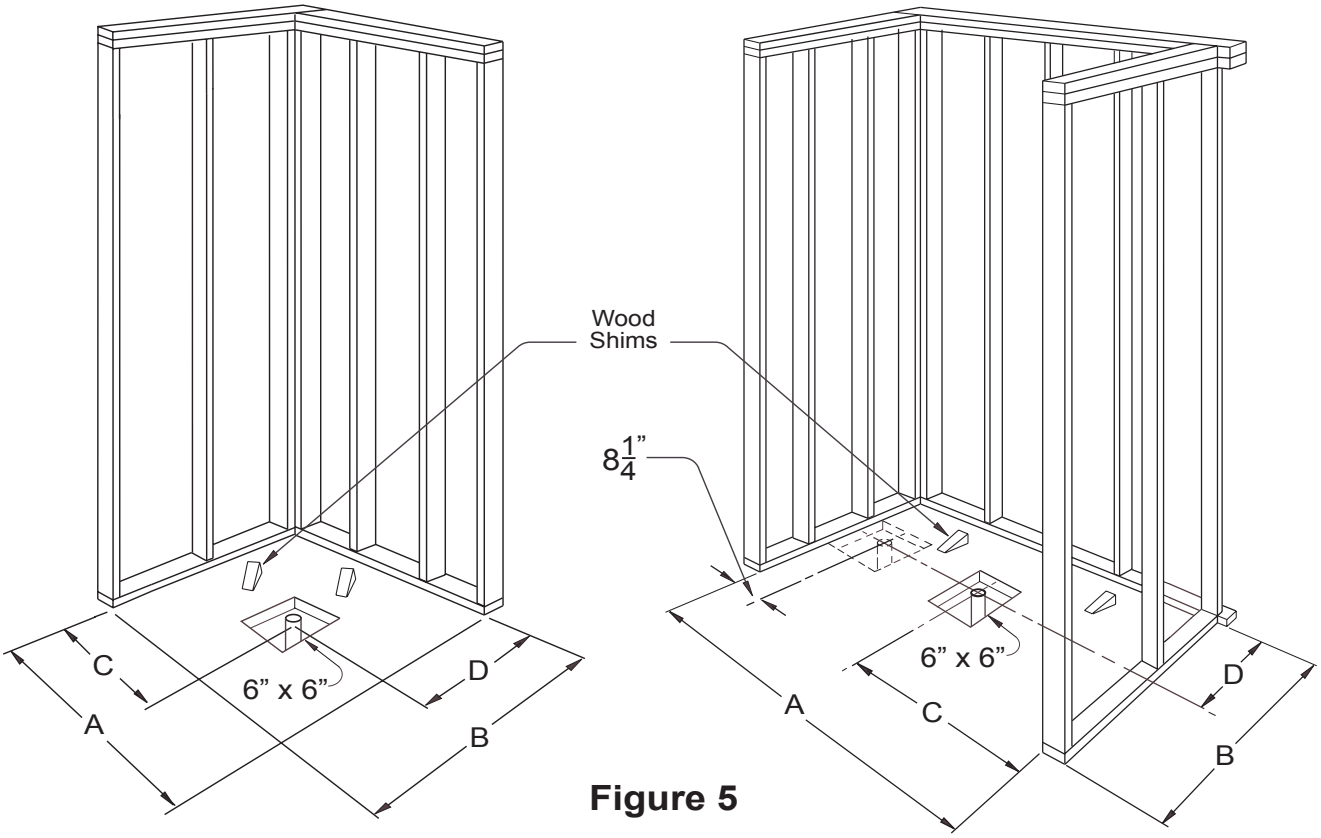

Figure 5

Copyright 2015