FRESNO BY-PASS GLASS SHOWER ENCLOSURE INSTALLATION

DIMENSIONS

TOOLS REQUIRED

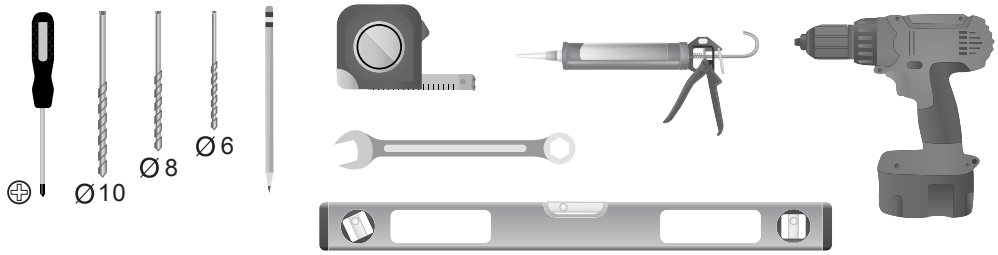

Architectural Concepts

O (888) 248 2724
D (720) 259 5358
E info@archconceptsllc.com

18505 Longs Way
Parker, CO 80134

archconceptsllc.com

Fresno By-Pass Glass Shower Enclosure Installation

MATERIALS PROVIDED

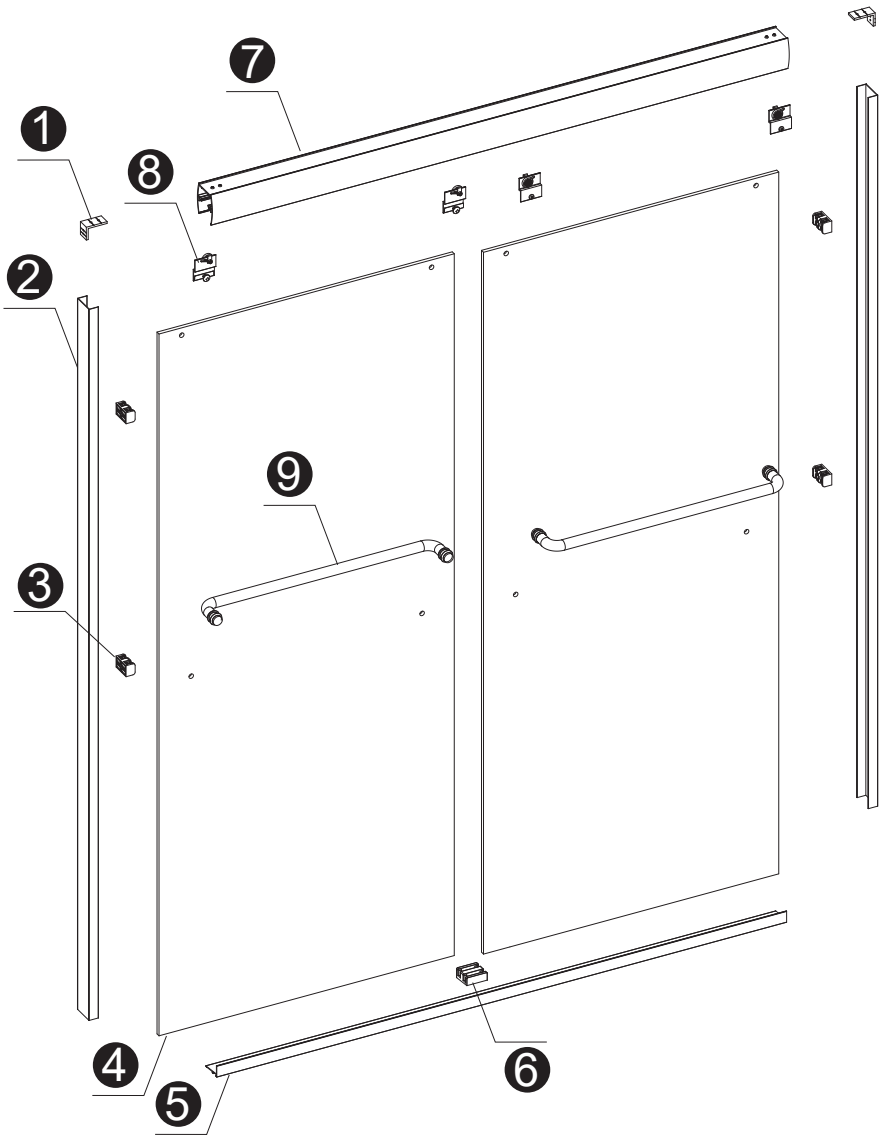

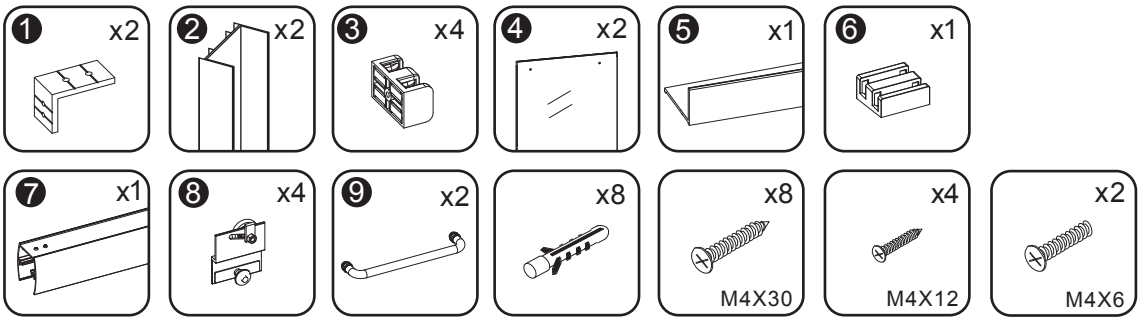

Fresno By-Pass Glass Shower Enclosure Installation

STEP 1

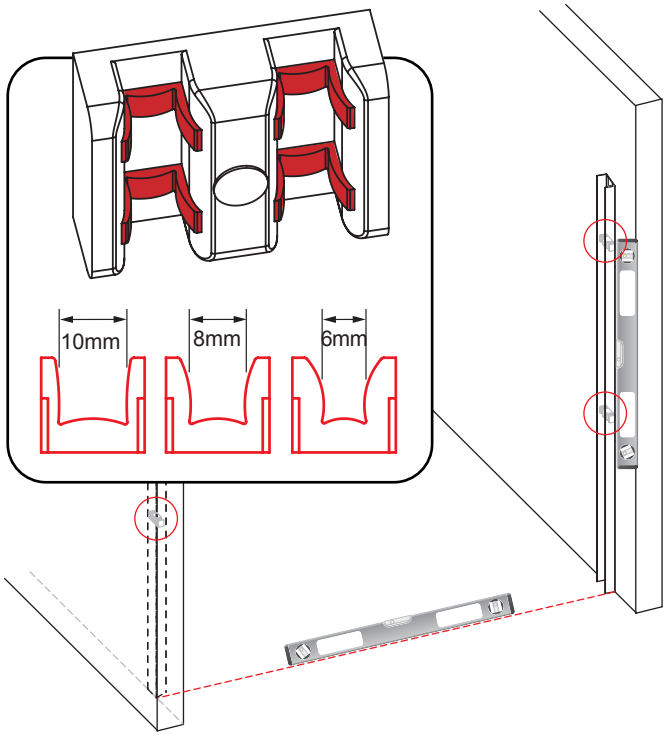

Use the included blockers that fit your glass thickness

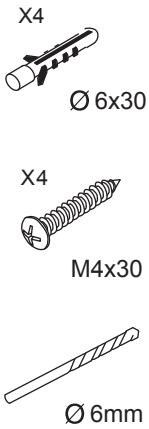

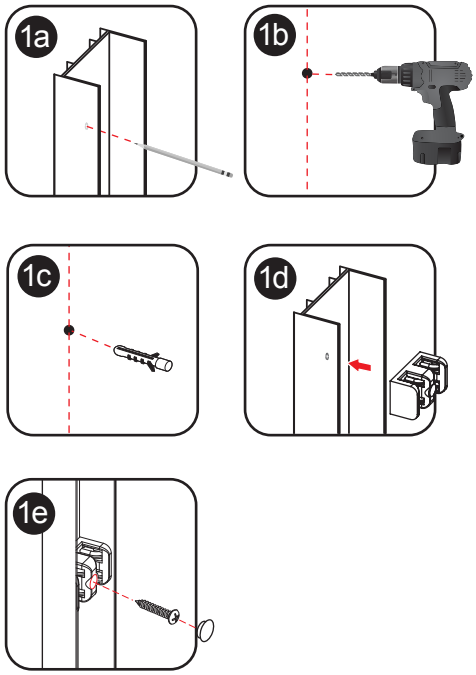

STEP 2

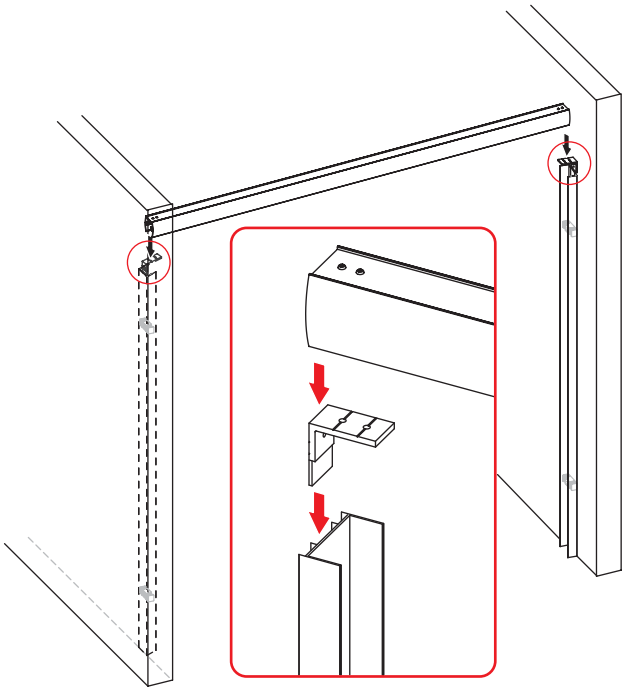

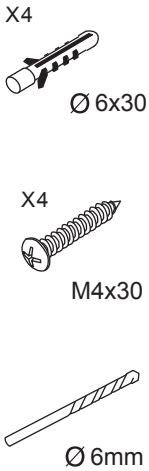

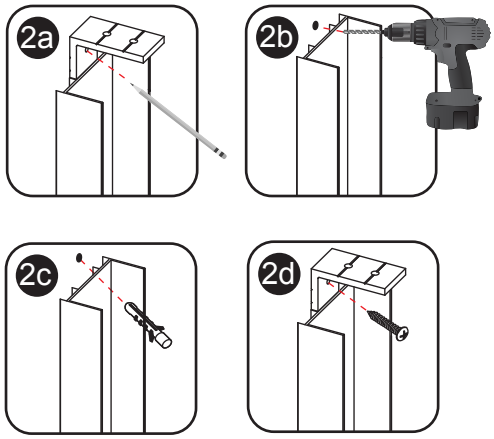

Fresno By-Pass Glass Shower Enclosure Installation

STEP 3

Use the included blockers that fit your glass thickness and placement in floor guide.

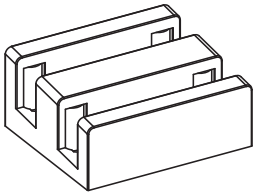

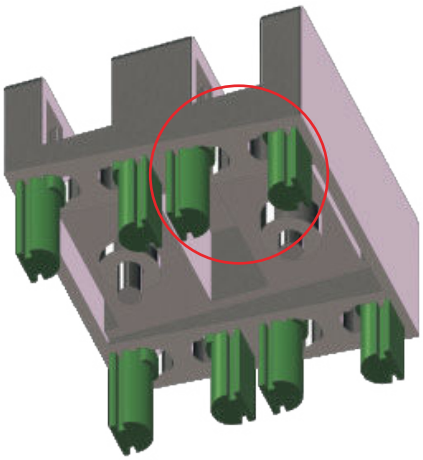

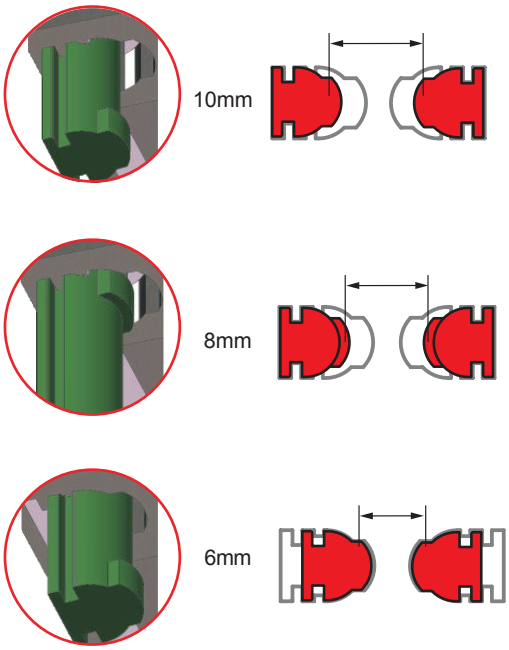

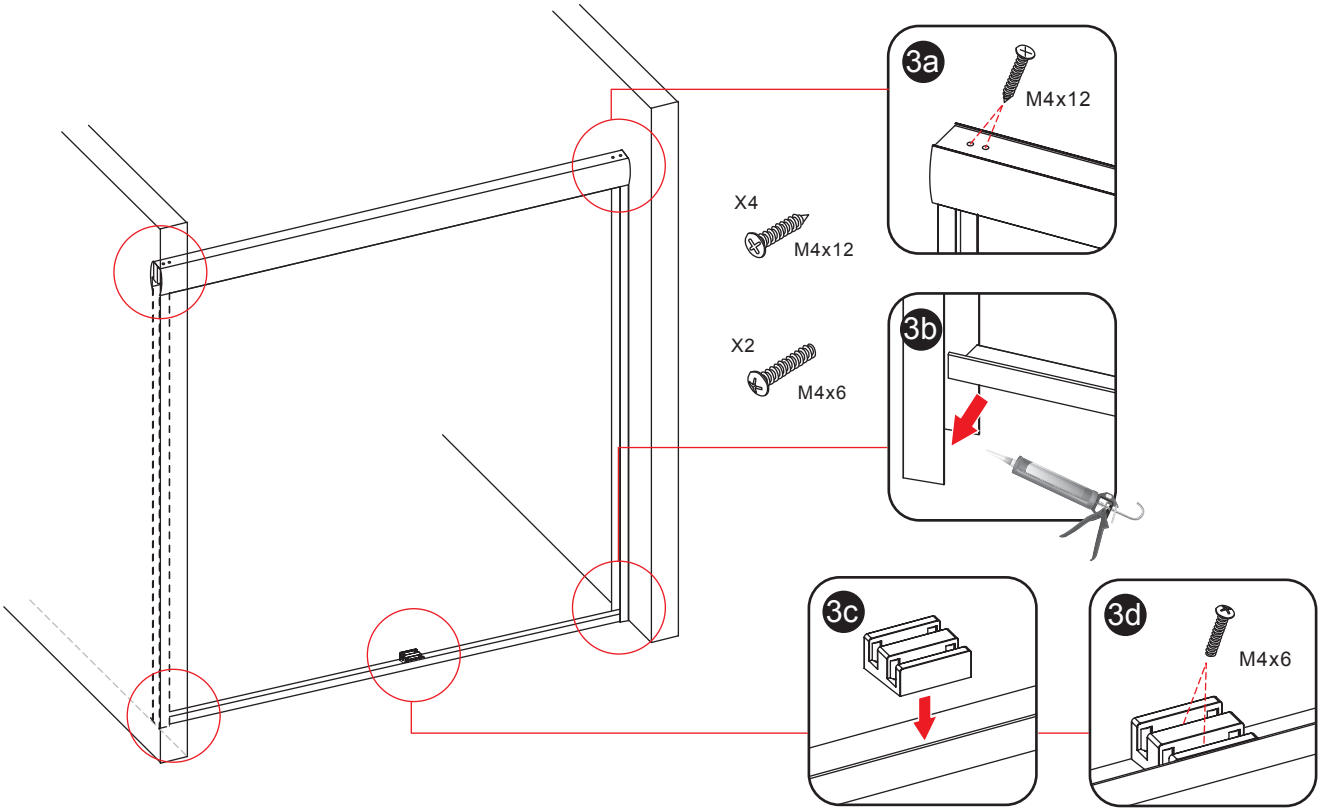

Fresno By-Pass Glass Shower Enclosure Installation

STEP 4

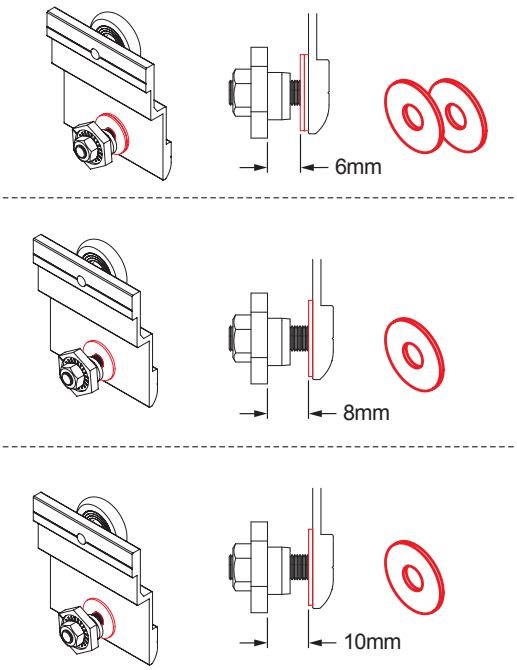

Select the number of gaskets according to the glass thickness.

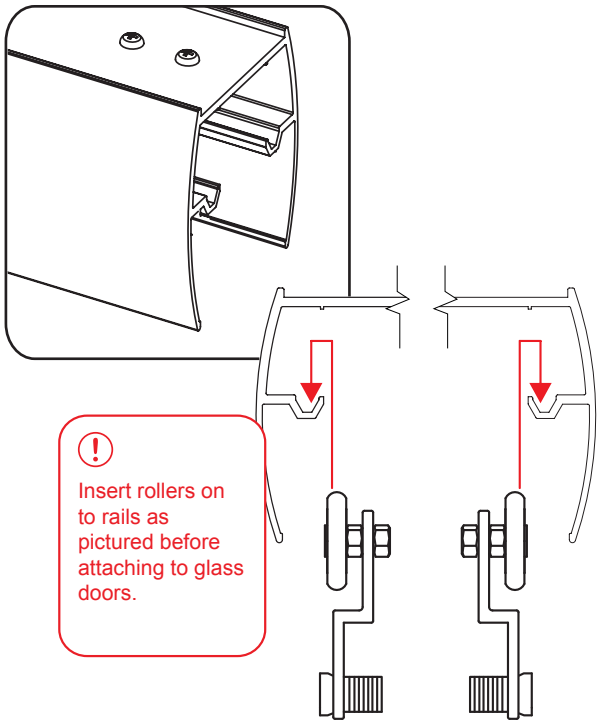

Insert rollers on to rails as pictured before attaching to glass doors.

STEP 5

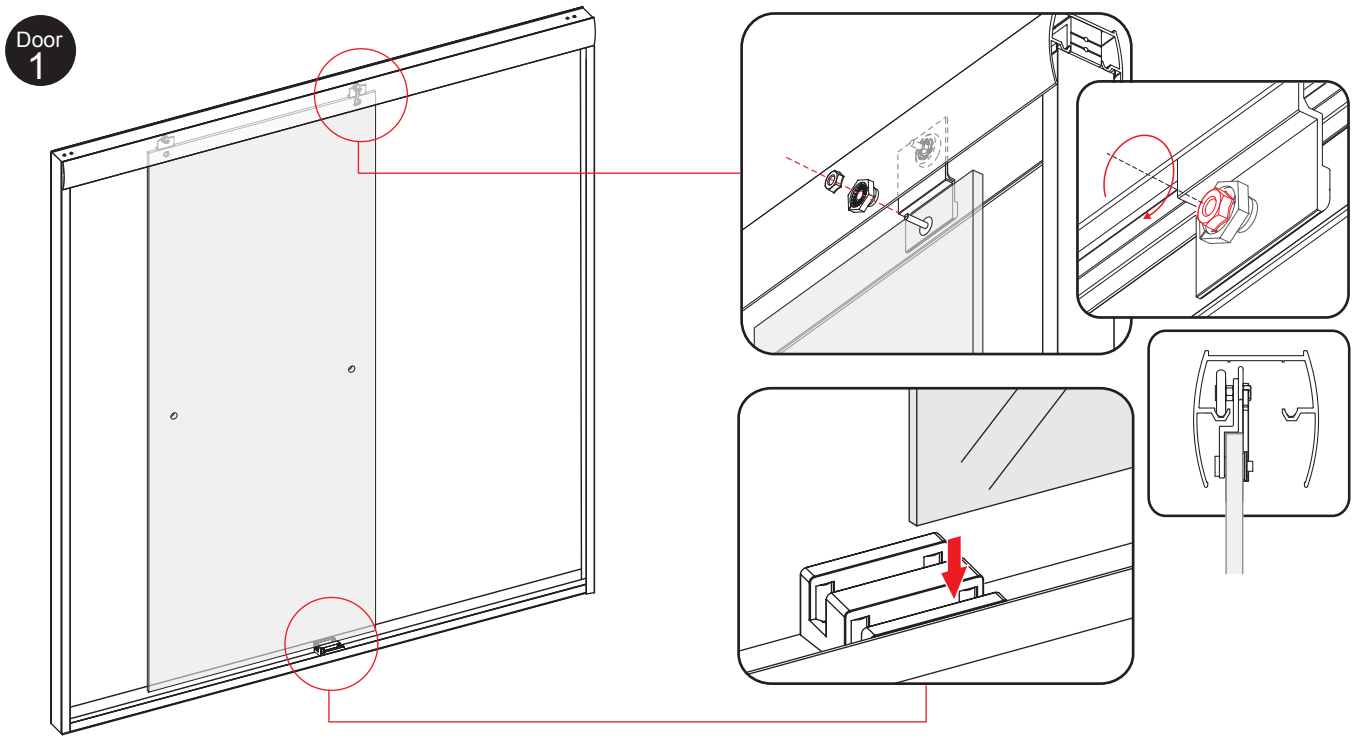

Fresno By-Pass Glass Shower Enclosure Installation

STEP 6

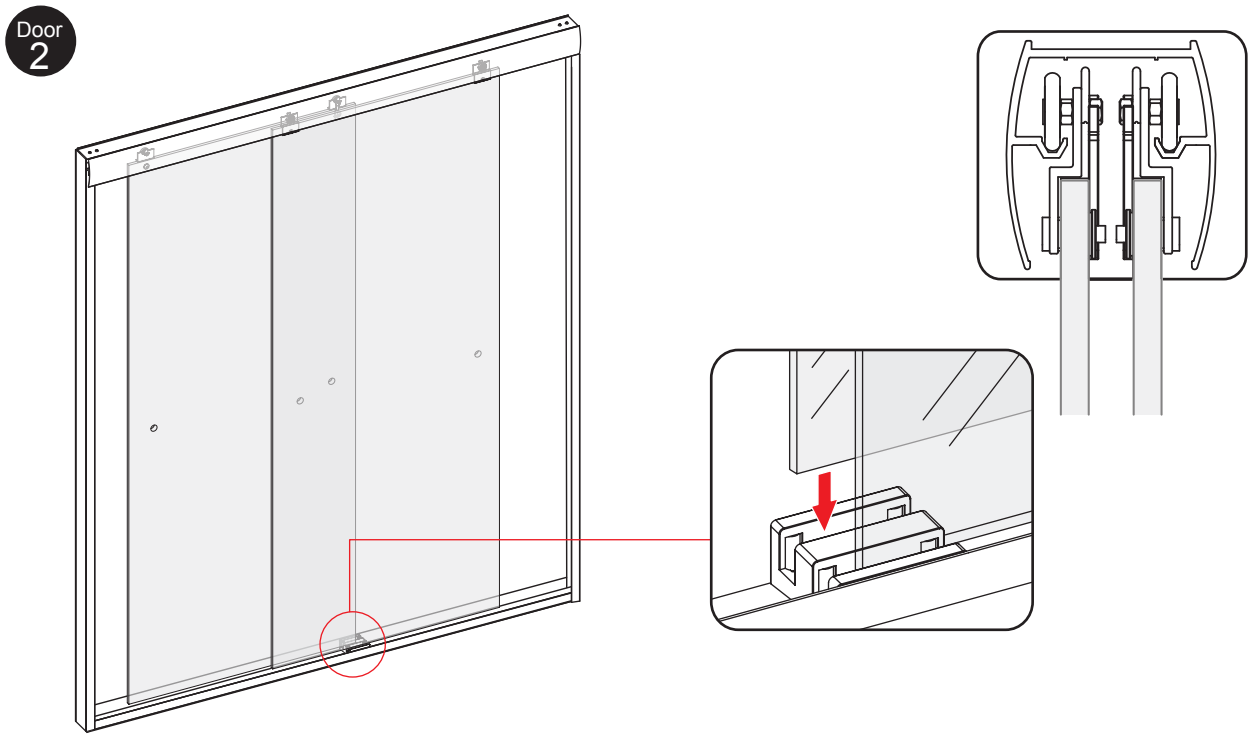
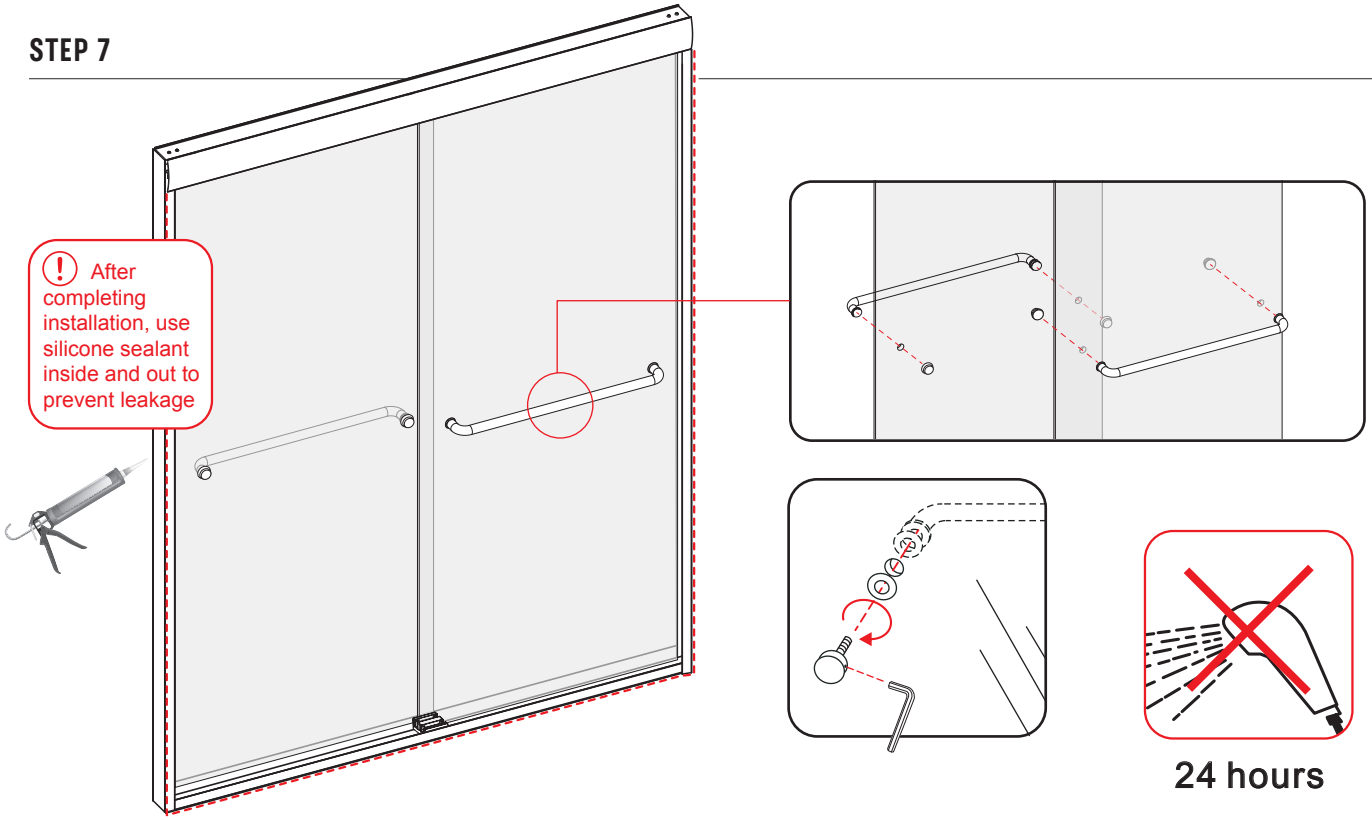
STEP 7