MPL IMI

203 N. Edgerton Street | PO Box 220| Fairland, Indiana 46126

Phone 317-835-9000
www.mplcompany.net

MADE IN THE USA

60" × 30" Trench Drain Shower Pan With 8" Offset Drain

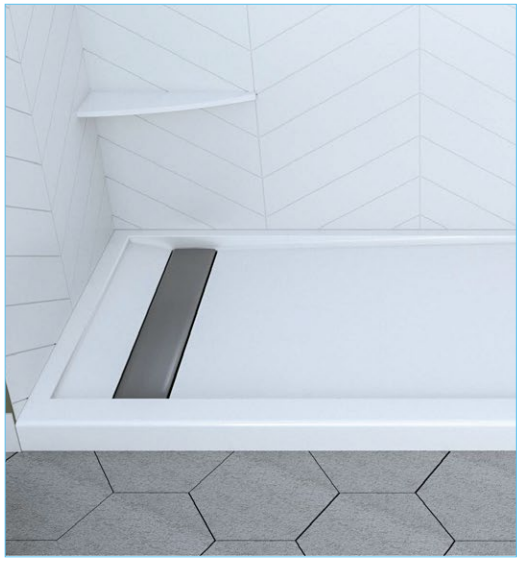

Specifications

- **Model**: SBTD-OSL-60x30-L/R
- **Pan Size**: 30" × 60"
- **Finish**: Textured; Non Slip
- **Side Wall**: 29 7/8"
- **Back Wall**: 59 ¾"
- **Drain Location**: 21 ¼" from Backwall; 8" from Side Walls
- **Drain Openings**: 3 ¼"
- **Front Curb**: 3" High
- **Integral Flange**: TBD
- **Color**: White, Cream, Ivory, Cameo White
- **Weight**: TBD
- **Material**: Cultured Marble
- **Product Compliance**: ANSI Z124 Test, ASTM F 462 (Anti-Slip Test), IAPMO Certified

Standard Features

- Solid 1 Piece Construction
- Pre-leveled, Rest on Sub Floor
- Grout-Free
- Non-Porous
- Waterproof and Leak Proof
- Mold and Mildew Resistant
- Bacteria Resistant

TOP VIEW

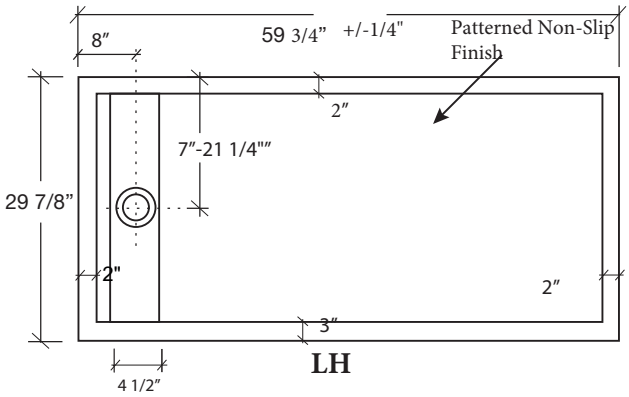

Flange Details:
Fire Rated Walls (U.S.)

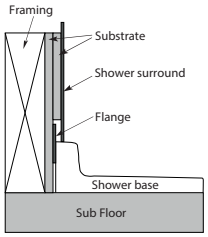

Flange Details: (U.S.)

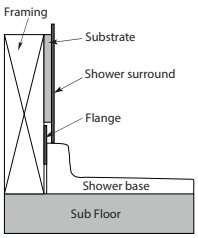

Drain Details: (U.S.)

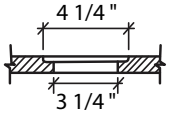

SIDE VIEW OF CURB

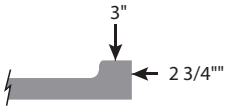

To review color options for this product please contact your sales representative or refer to our website at:

www.mplcompany.net/request-color