MPL Company

Commercial Bath Solutions

# MALIBU

## Hinged Swing Shower Enclosure Installation Instructions

**76" OA Glass Height**

*Customization Options Available*

## HARDWARE INCLUDED

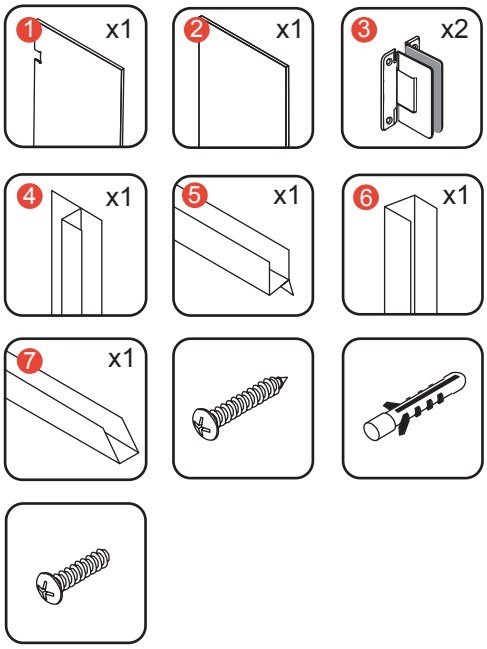


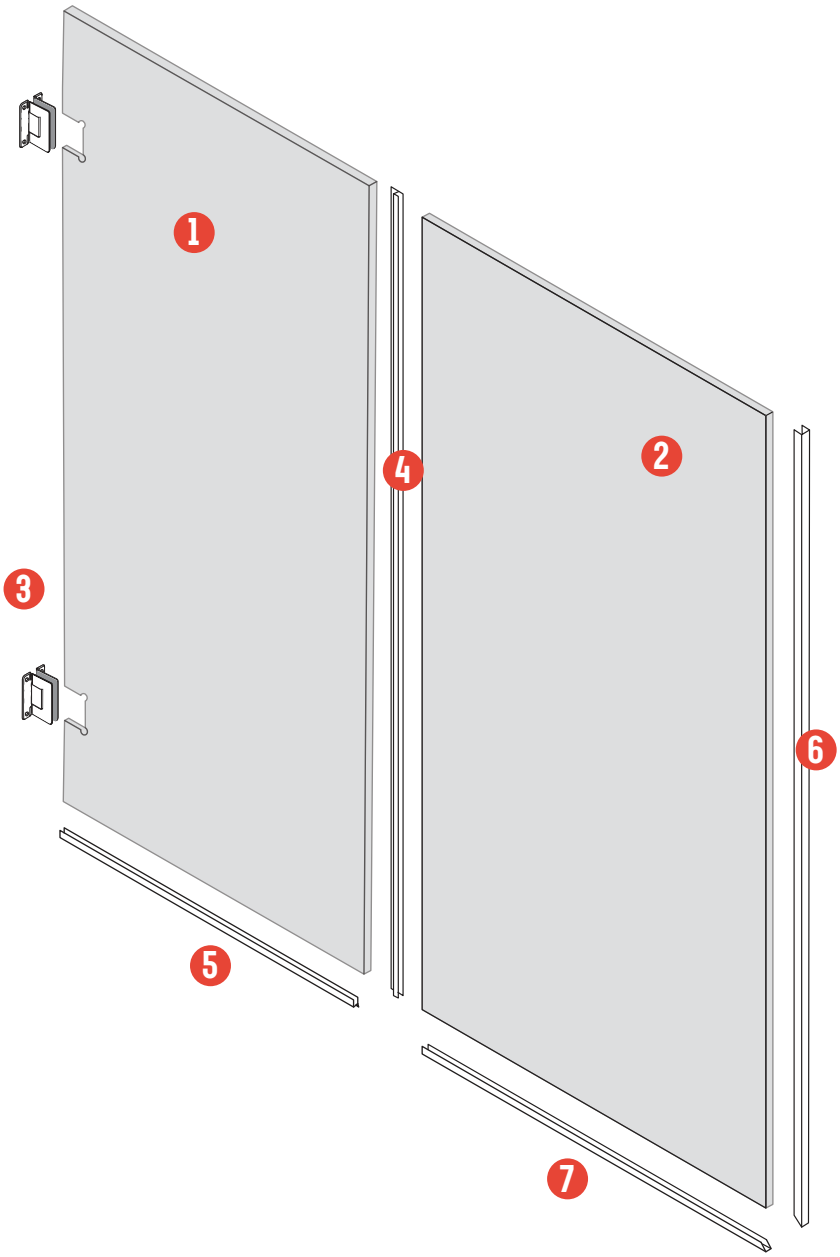


## TOOLS NEEDED

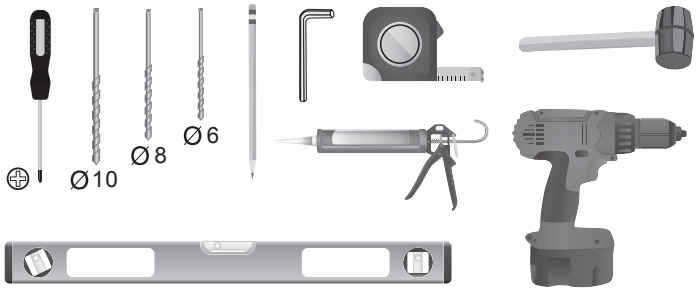

## Step 1

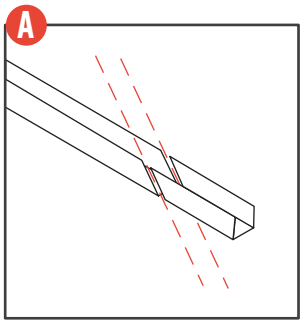


### A.1

Measure width of opening. U-channel for bottom of fixed panel should be cut to leave correct space for the selected door width (28"/30"/32"), plus desired gap spacing (1/4" at hinge, 1/8"-3/8" and door-panel gap)

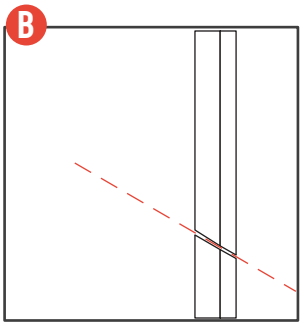


### B.1

Vertical channel should be cut so that it will be flush with the top of the glass at 76", with miter cut where meeting the bottom U-channel. If custom height or full height panel is being used, adjust cutting to desired dimension

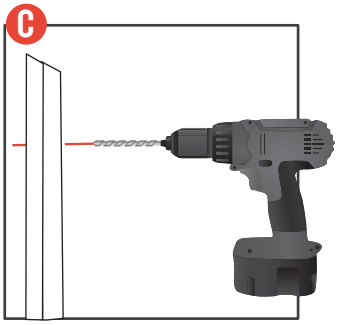


### C.1

Pre-drill 3-4 holes in the vertical U-channel. ***Tip*** If you locate the holes to align with the grout lines in tile you can avoid possible tile breaking while drilling

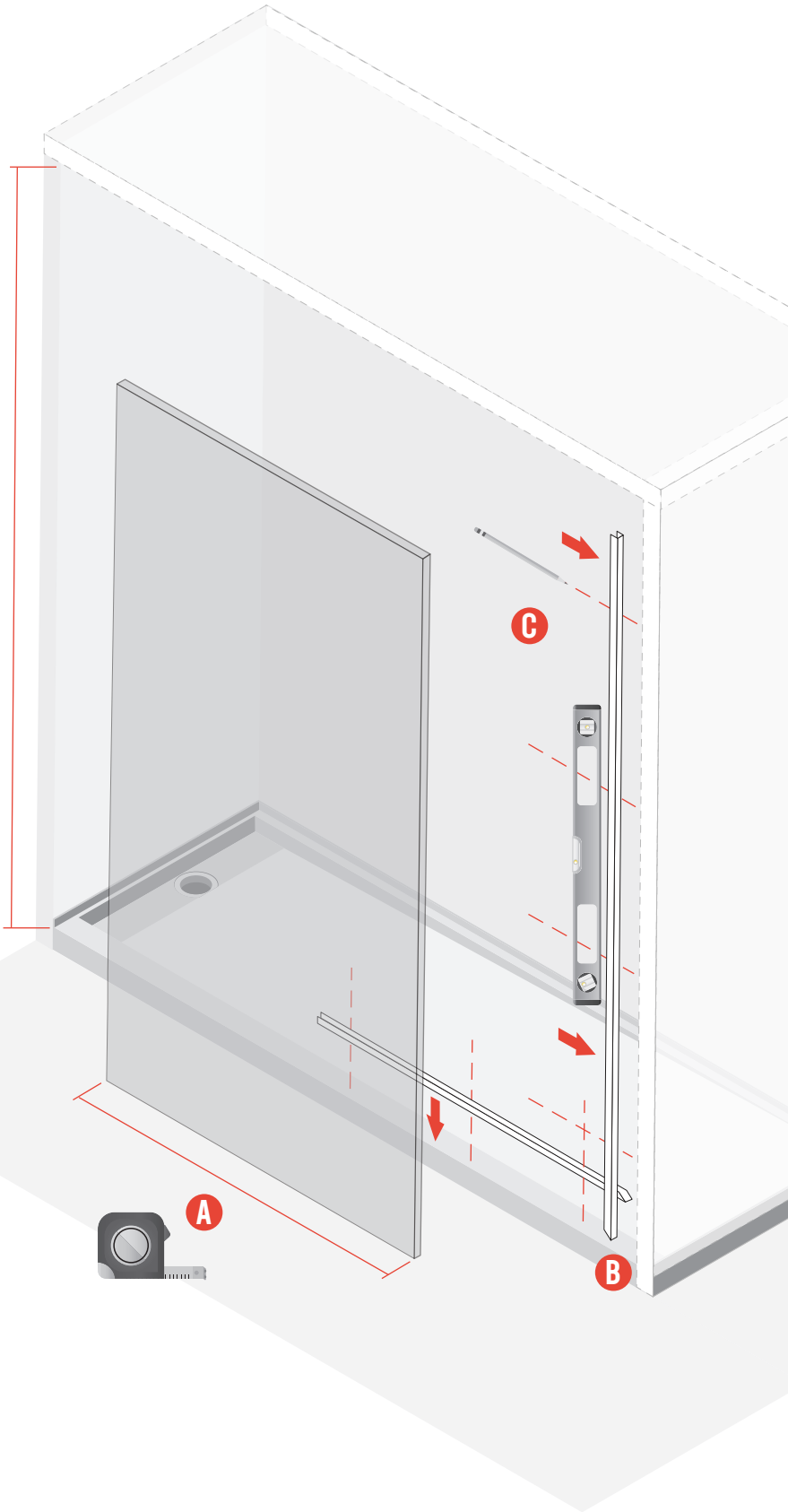

## Step 1

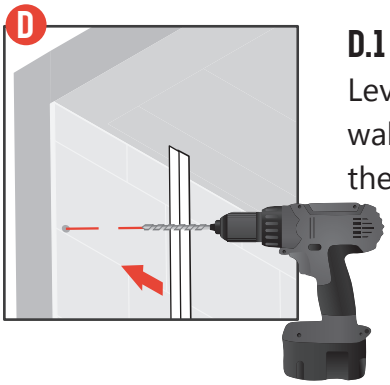


### D.1
Level against the wall, mark and drill the holes

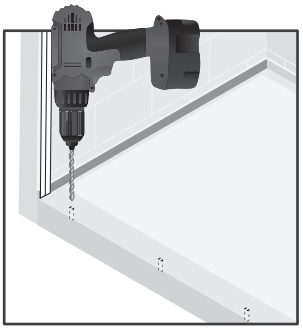

### D.2
Drill holes where desired to permanently anchor U-channel in place

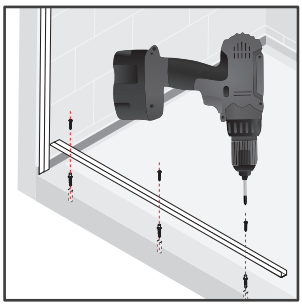

### D.3
Mount U-channel with desired fasteners. Fasteners anchored into ceiling, if required for the application, must hit solid blocking or be installed with adequate drywall achors to support the weight. Unique anchors to support this installation method are not included and would be determined by the installers evaluation of the application

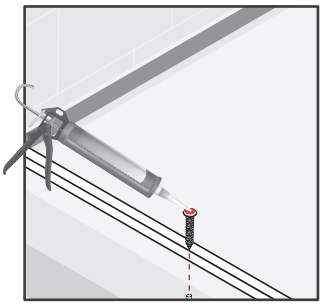

### D.4
Apply silicone sealant over the screws to seal the penetration prior to installing the glass

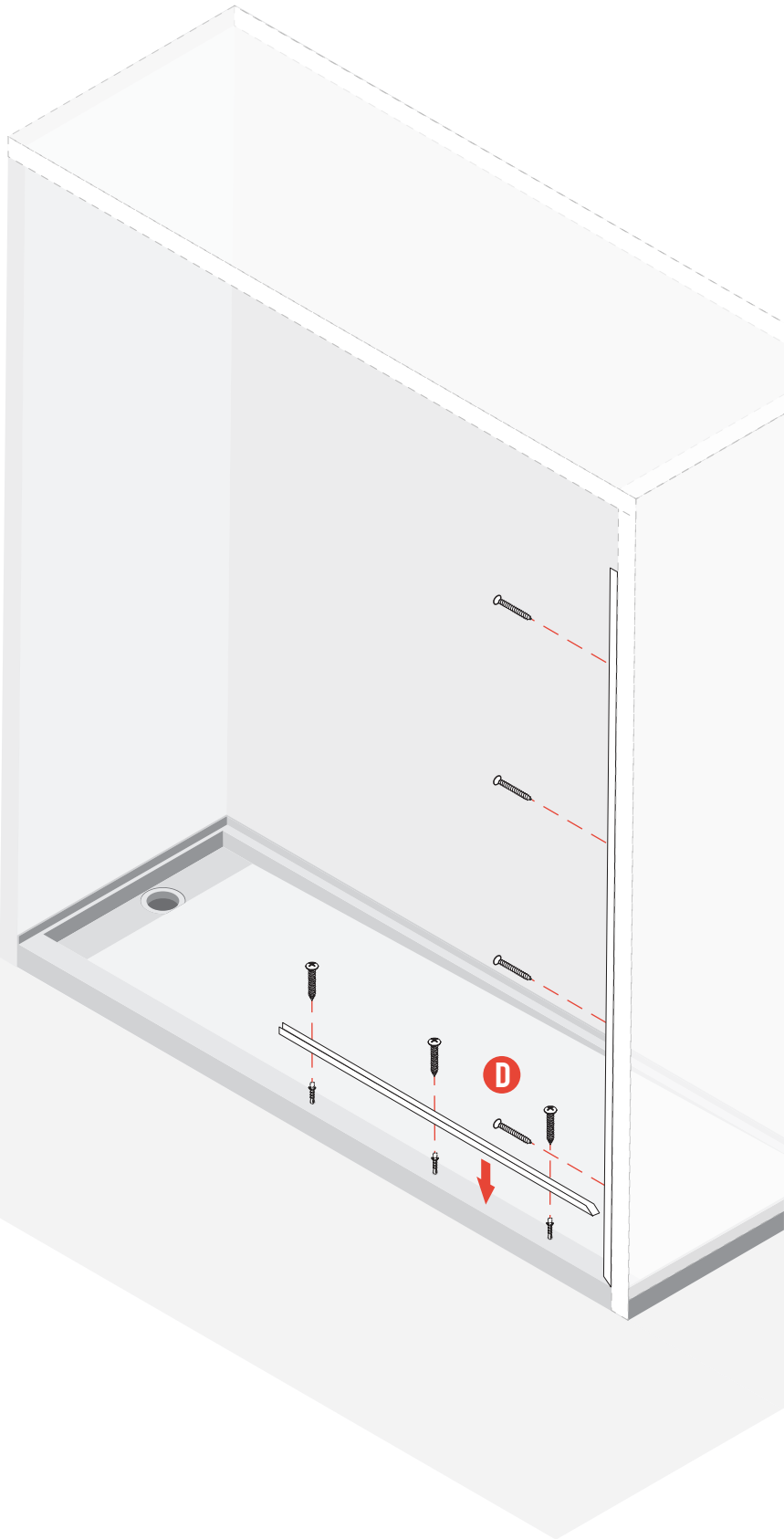

## Step 2

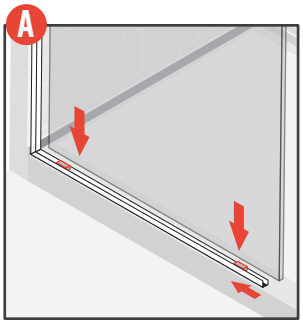


### A.1
Drop into bottom U-channel with setting blocks

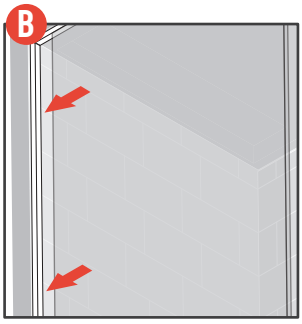


### B.1
Gently slide into side channel

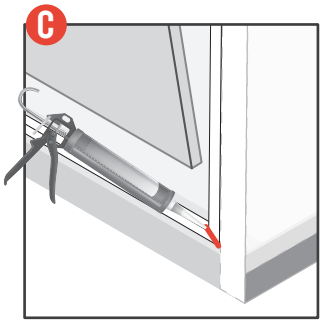


### C.1
Use silicone sealant to seal inside of miter joint prior to installing glass panel

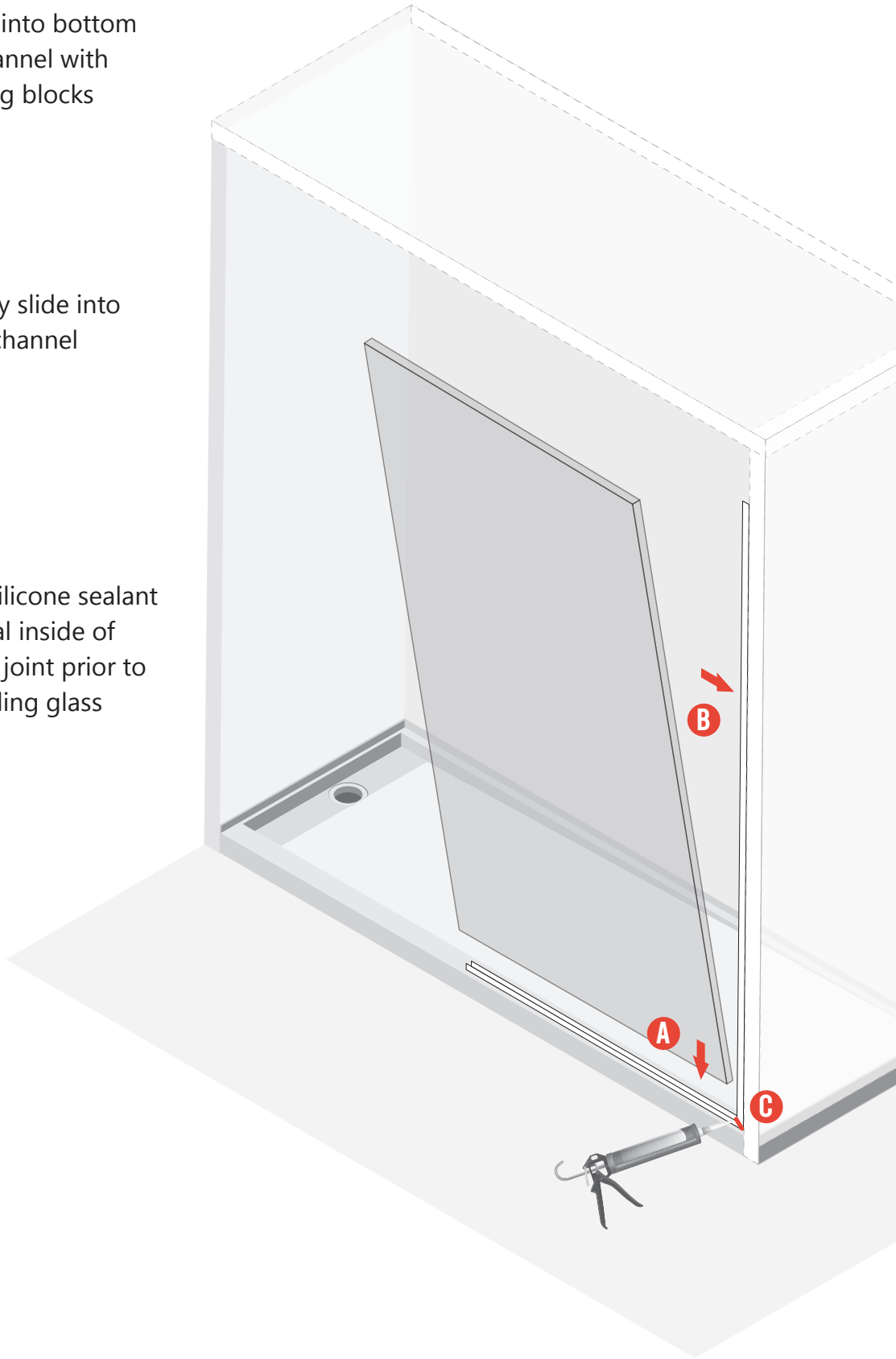

## Step 3

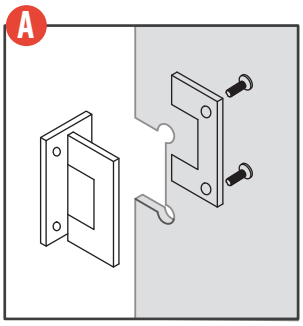


### A.1

Gaskets are provided for hinges and are to be installed between glass and hinge on both sides.

Hinges include gaskets for 1/2" glass A (thinner) and 3/8" glass (thicker). Select correct gasket for your application. Removable hinge cover plate and screws to be installed to the INTERIOR of the shower

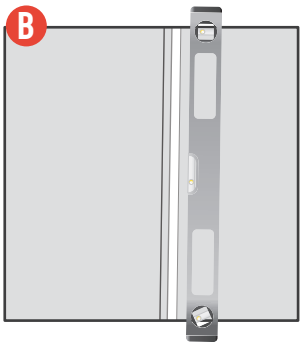


### B.1

Level door and make sure space between door and panel are consistent top to bottom

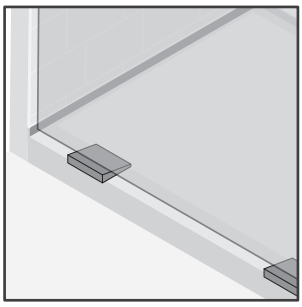

### B.2

Use shims raising door 7/16″ off of curb allowing for bottom door sweep Keep door level

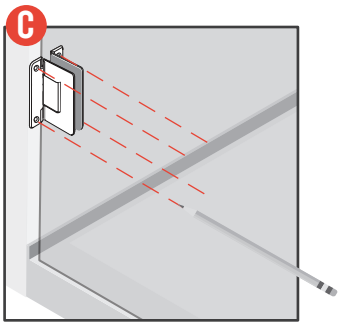


### C.1

Align door so that the glass is plumb and also in equal vertical plane to the fixed panel. Mark holes when desired door position is identified

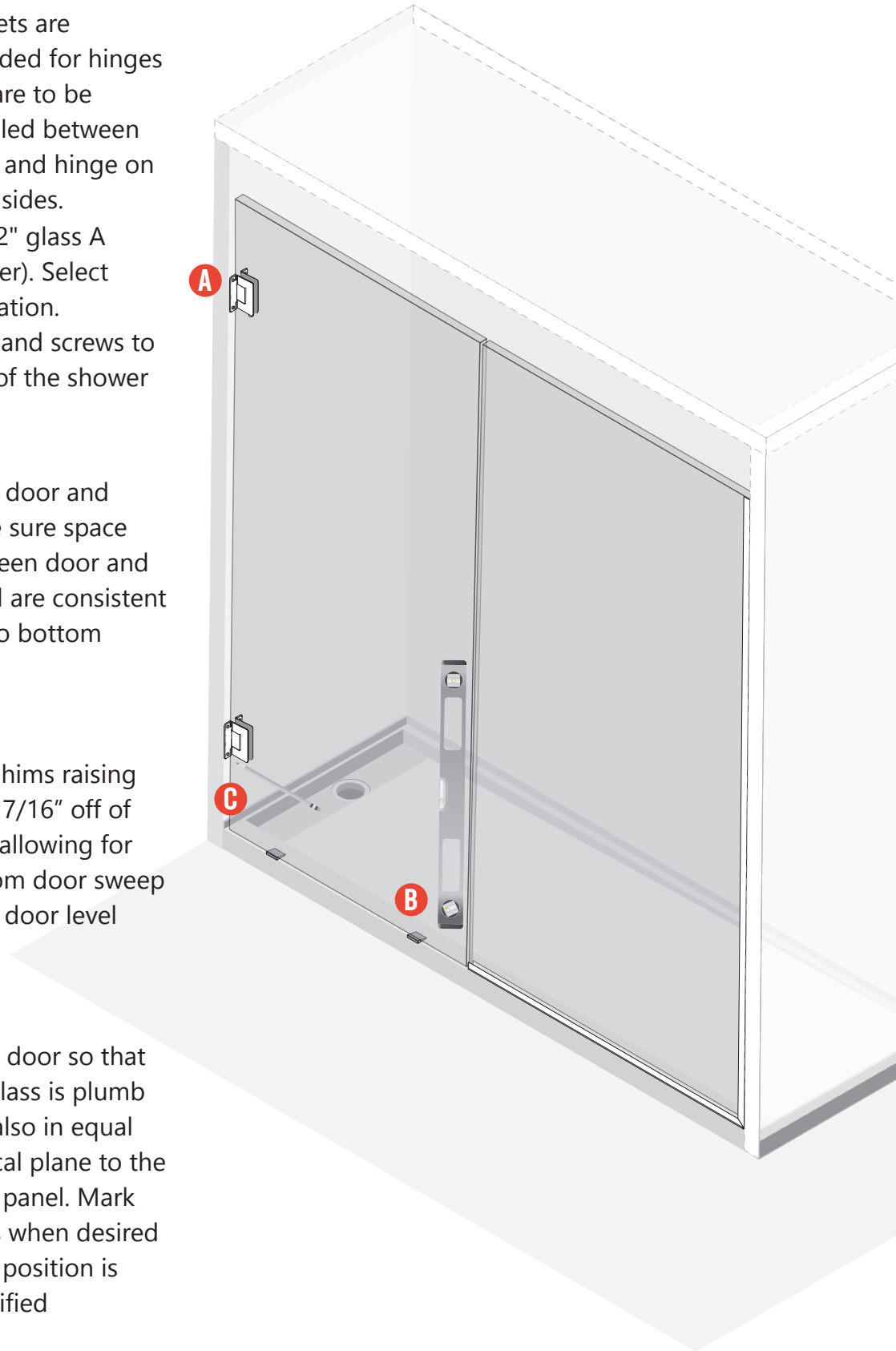

## Step 3

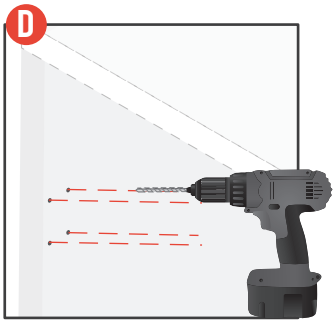


### D.1

Drill holes for hinges where marked, adequate for desired installation method

Fasteners should extend beyond wall covering and drywall behind and anchor to solid blocking in the wall. Anchoring to tile or cultured marble with only masonry anchors is not a recommended installation method. Solid blocking is necessary to support the weight of the glass door

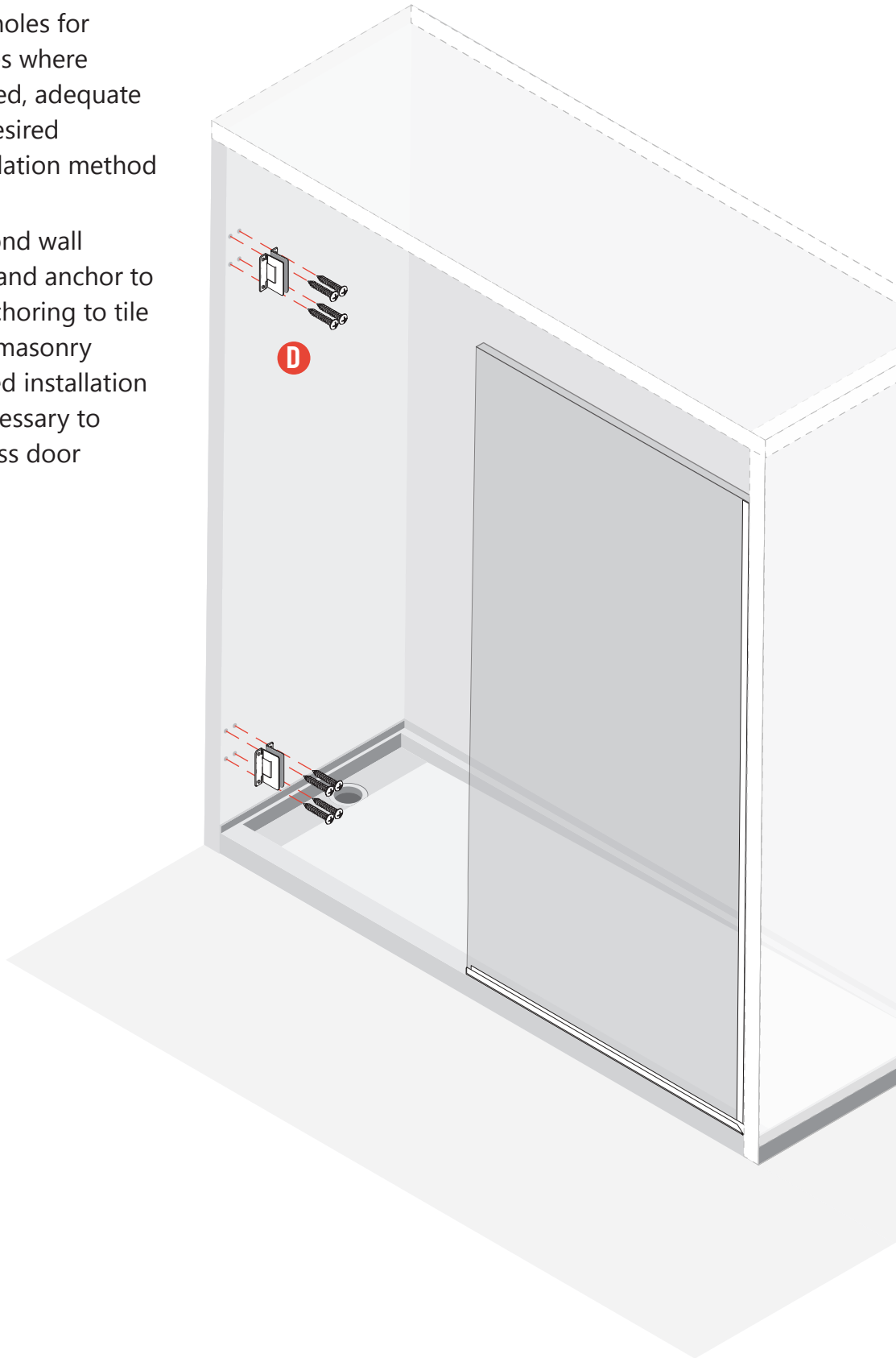

## Step 4

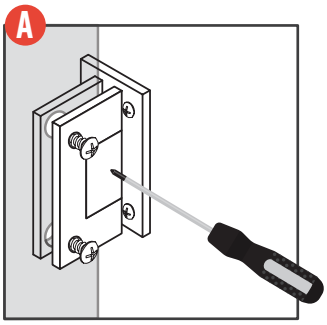


### A.1

Hinges allow for small final adjustments of glass position. Install hinge plate and tighten screws to slightly snug condition. Adjust glass as desired into final position, and then finish tightening hinge plate screws securely to prevent glass from moving. Be careful not to strip screw heads when tightening. (Hand screwdriver or Battery Powered Impact driver with properly adjusted clutch recommended)

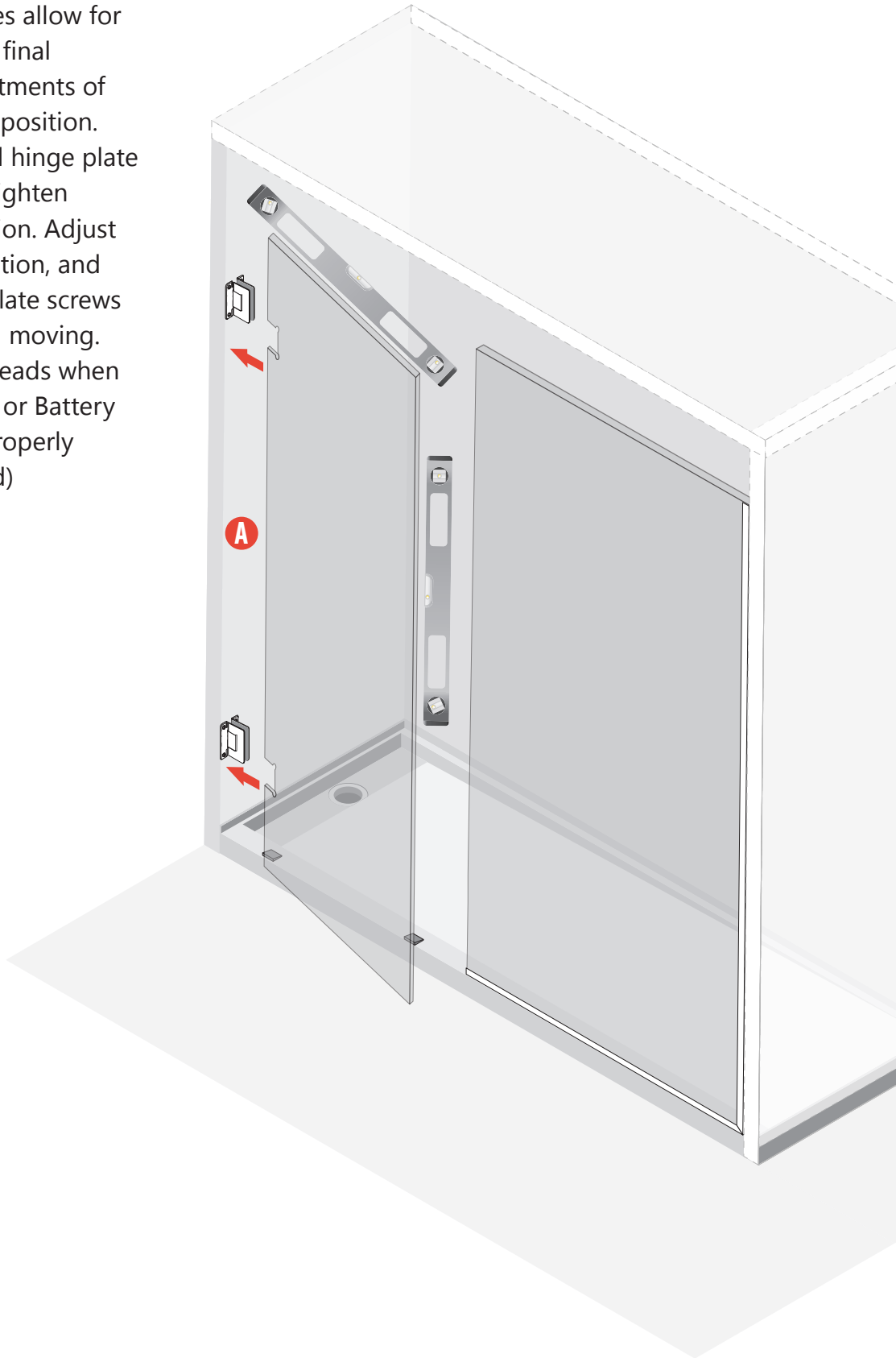

## Step 5

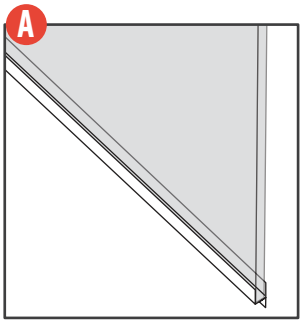


### A.1

Install polycarbonate bottom sweep on door first, running full width of the bottom of the glass. Trim as needed for proper fit

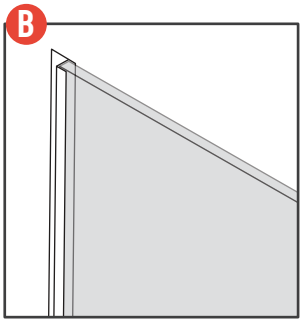


### B.1

Install vertical strike seal, measuring for proper height from top of U channel to top of glass door, and trim accordingly

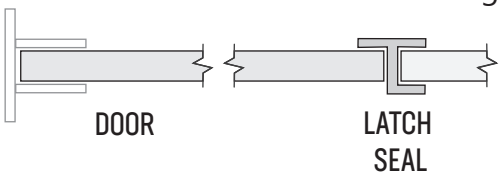


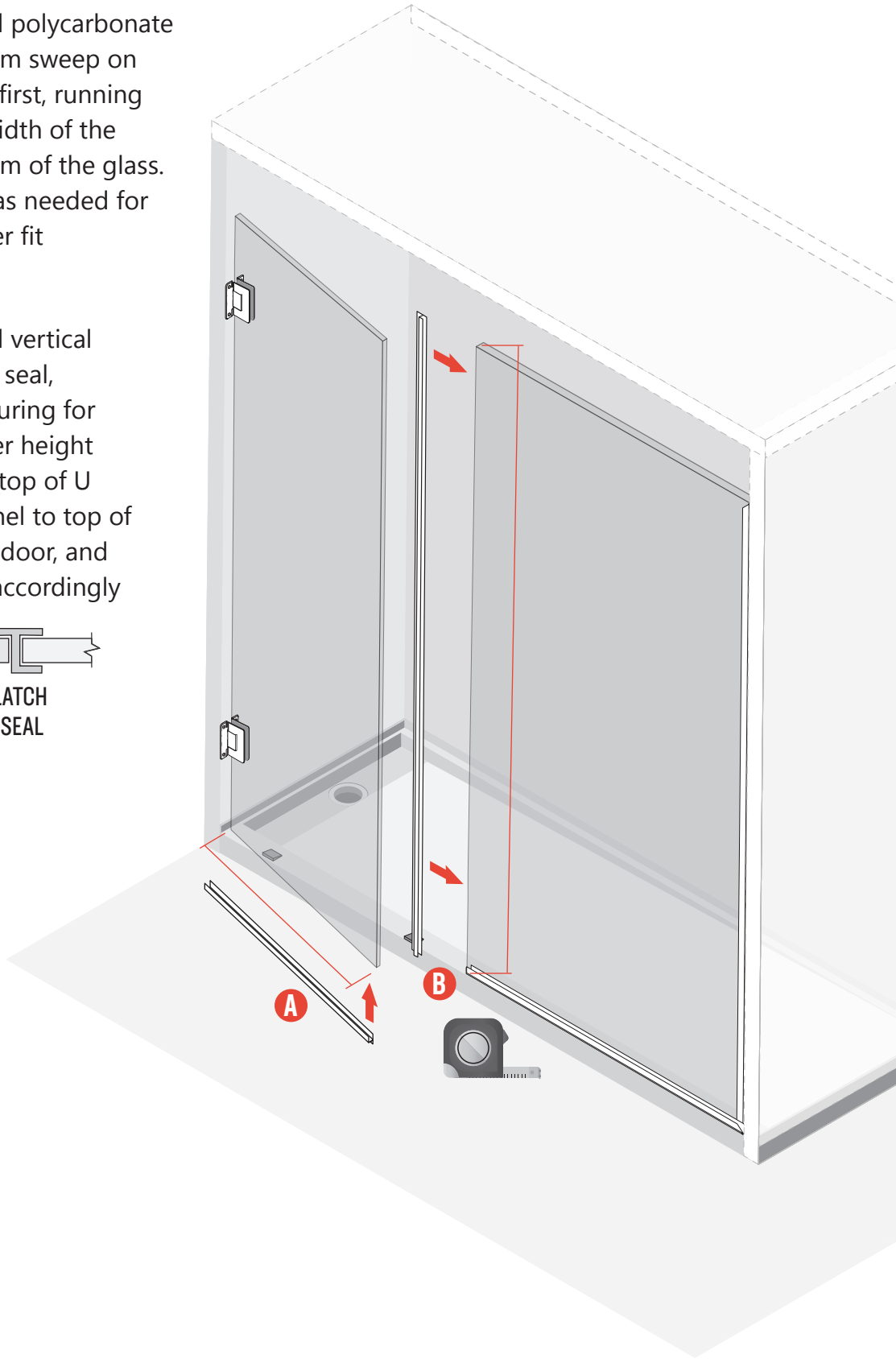

## Step 6

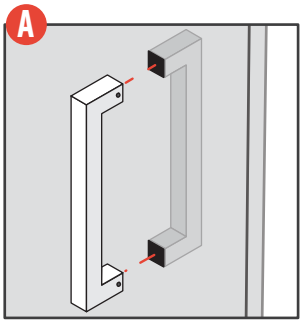


### A.1

Install hardware to shower door

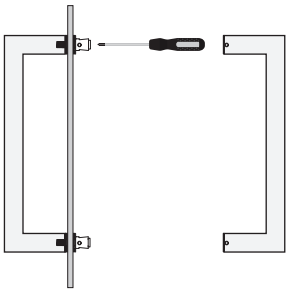

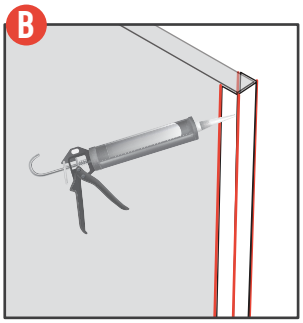


### B.1

Seal shower door properly by using a 100% mildew resistant silicone. Silicone is requried to be installed both inside and outside of the shower at any joint where the U-channel meets the wall, as well as all joints where the U-channel meets the glass. U-channel is not designed to accept and expel water, so these joints must be sealed to keep water from penetrating. ***TIP*** Using masking tape to protect adjacent surfaces and clearly define the sealant application space can make for a more desirable finished installation and simpler cleanup

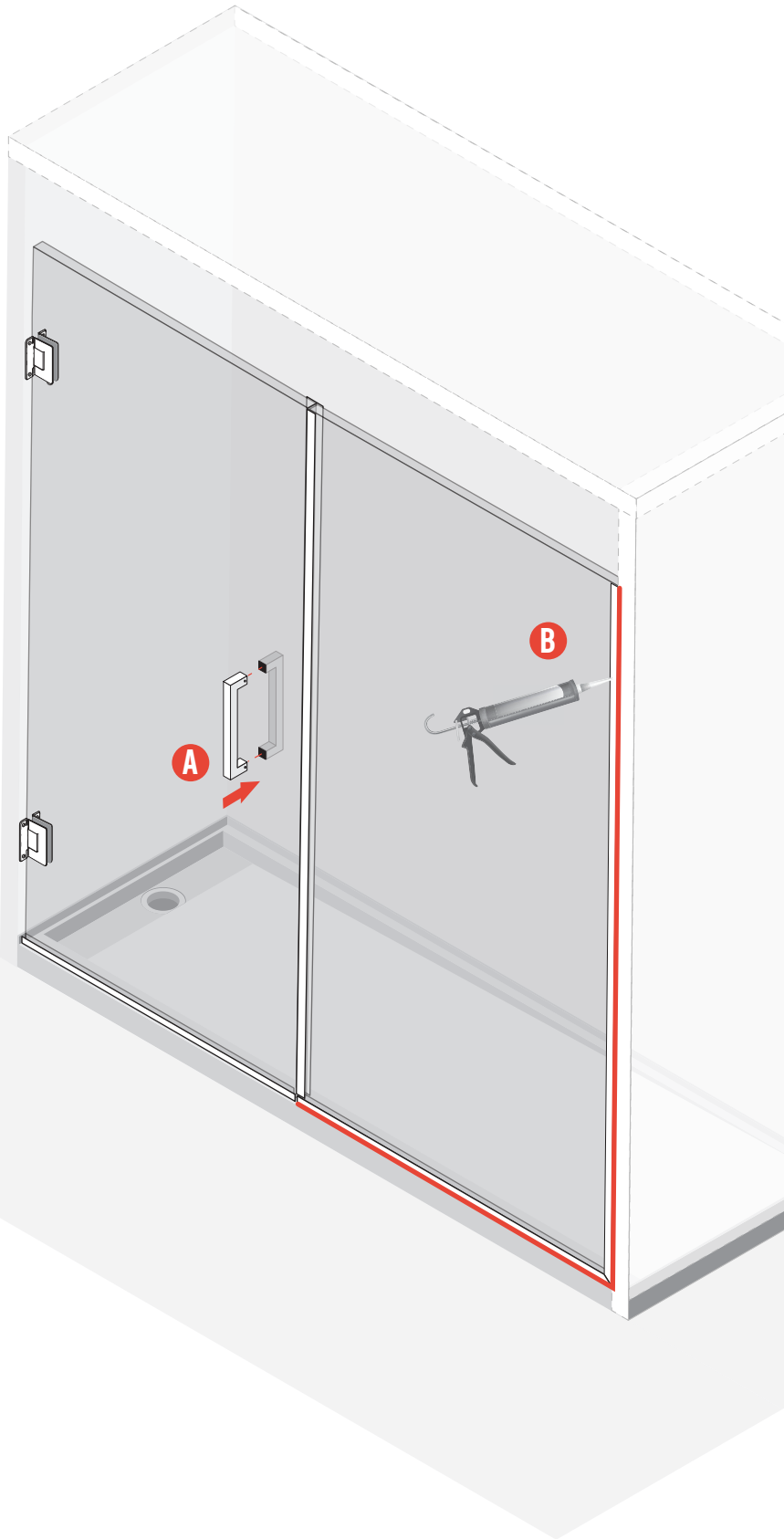

## Alternative full height panel

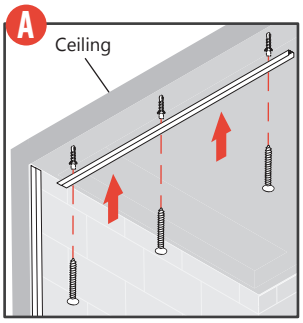


### A.1
Measure, drill and mount top u-channel to ceiling

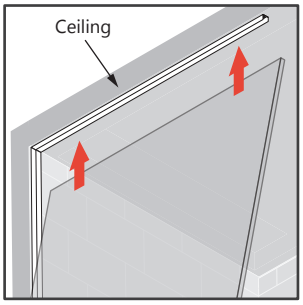


### A.2
Carefully slide panel into top u-channel

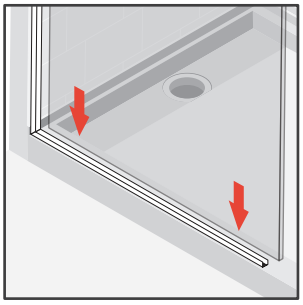

### A.3
Then drop into bottom u-channel with setting blocks.

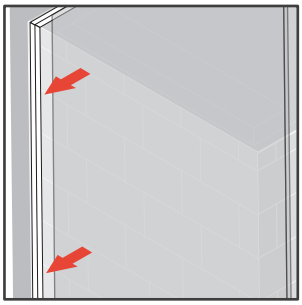
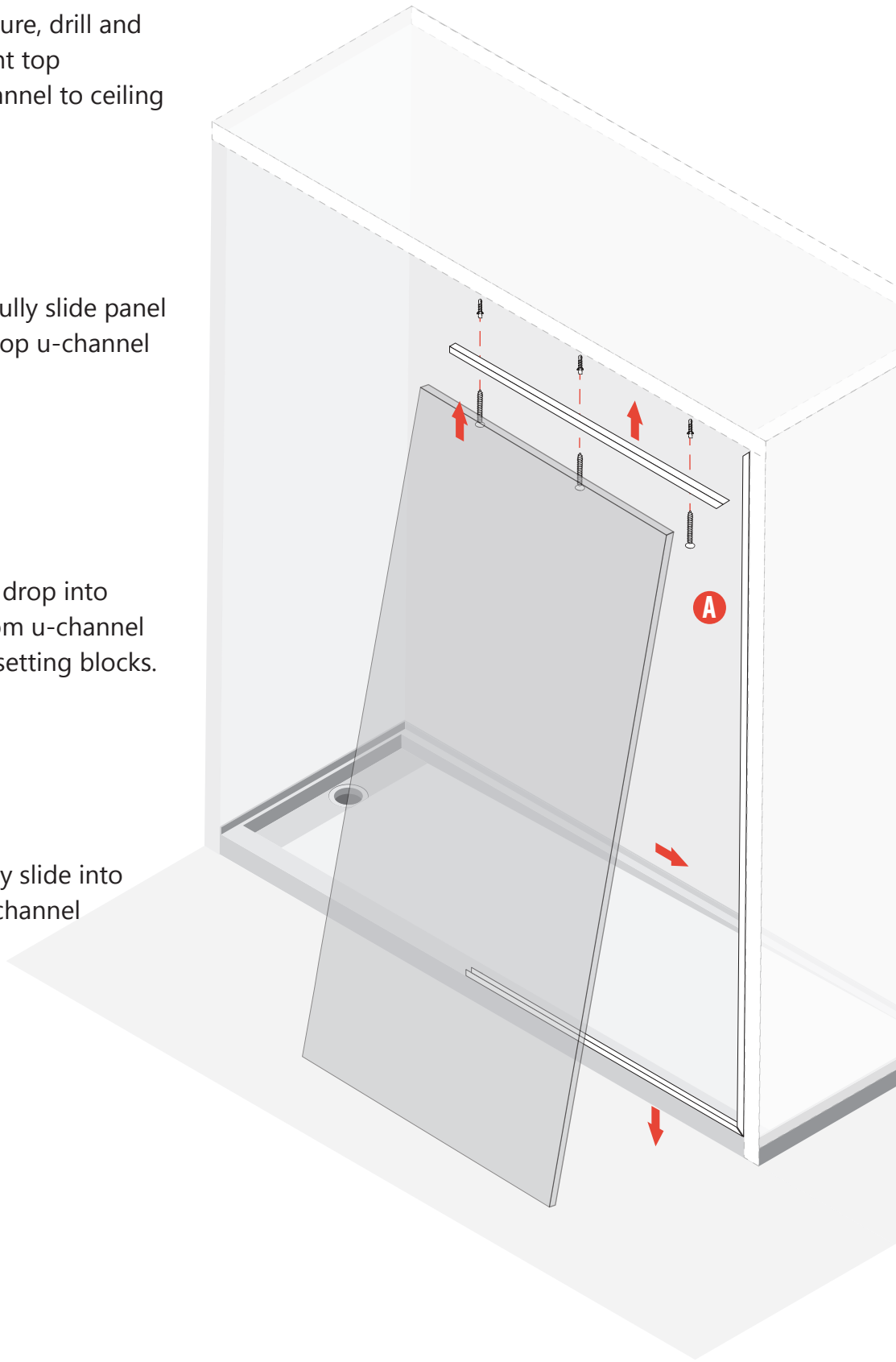
### A.4
Gently slide into side channel