MPL Company

Commercial Bath Solutions

NEWPORT GLASS SHOWER ENCLOSURE BARN DOOR INSTALLATION

DIMENSIONS

TOOLS REQUIRED

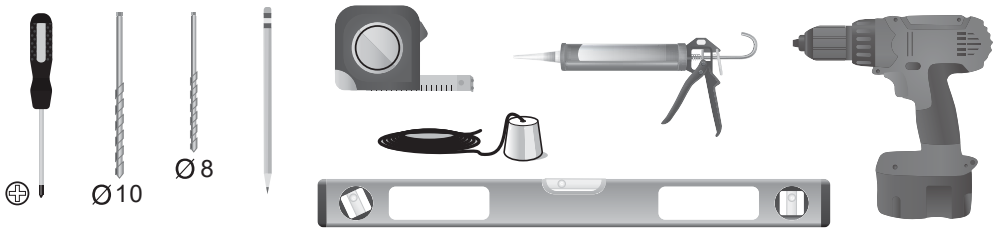

MPL Company

O: 317-835-9000

E: CustomerService@mplcompany.net

203 N. Edgerton St.

Fairland, IN 46126

Newport Glass Shower Enclosure Barn Door Installation

MATERIALS PROVIDED

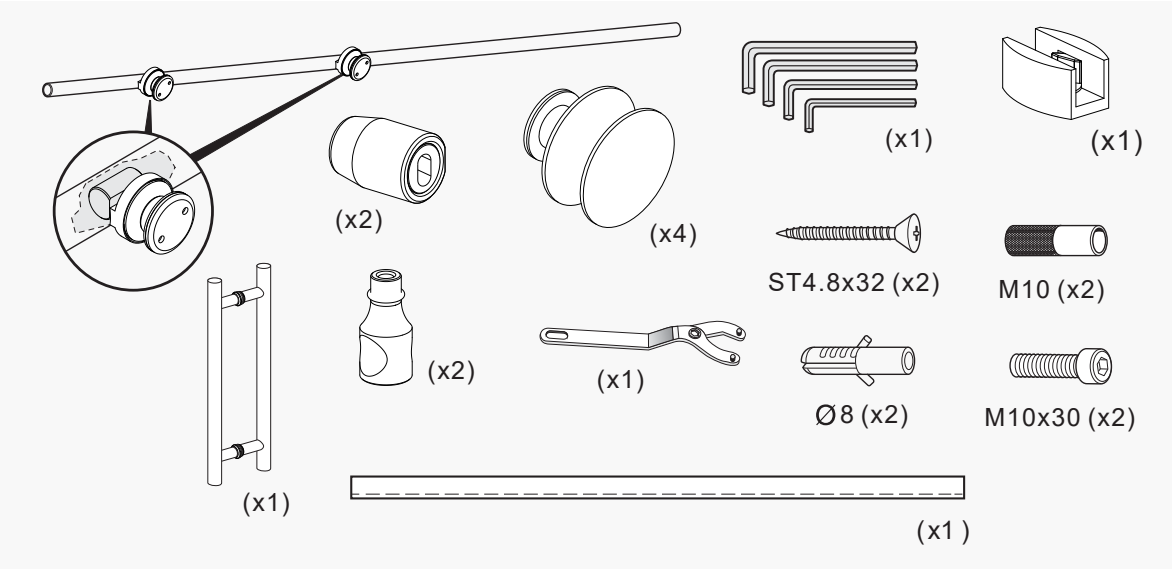

STEP 1

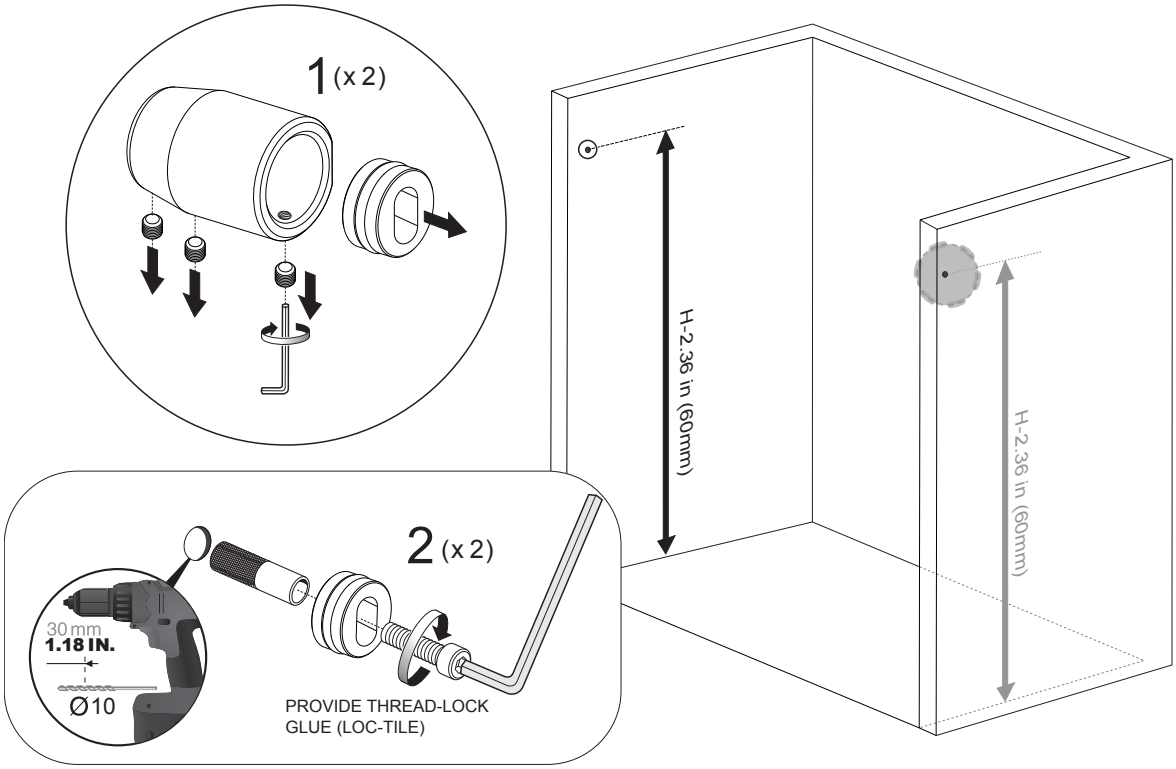

NOTE: INSURE THAT THERE IS PROPER BLOCKING FOR EXPANSION BOLTS TO MOUNT THROUGH. IF NOT, THE EXPANSION BOLTS WILL NOT GRIP. HOLE SHOULD BE 3/8” IN DIAMETER (10MM). THE MOUNTING BRACKET WILL GIVE YOU ABOUT A 1/4” PLAY UP OR DOWN FOR THE ROD.

Newport Glass Shower Enclosure Barn Door Installation

STEP 2

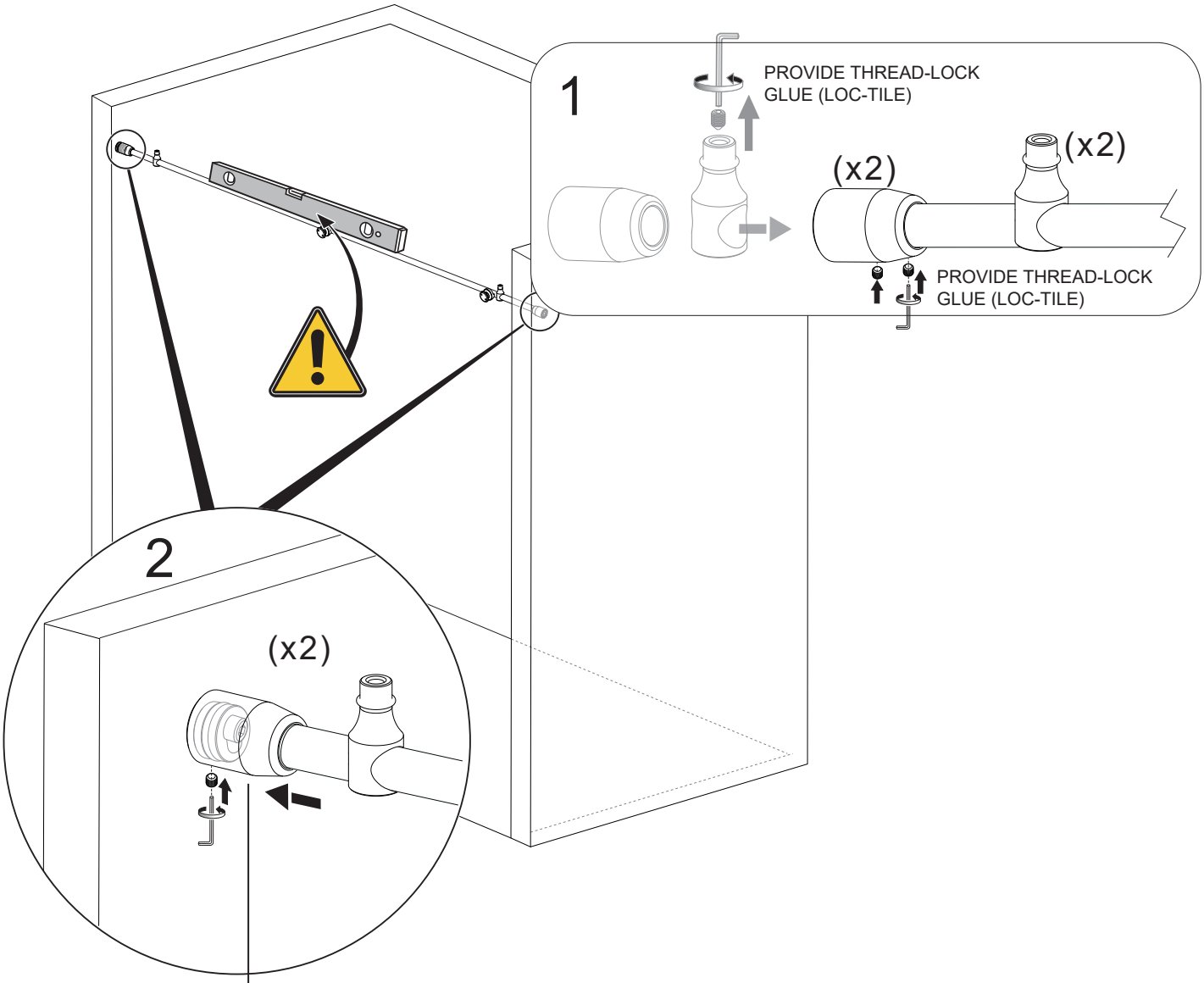

MAKE SURE THAT THE FLAT SIDE OF ROD MOUNT FACES THE SHOWER SIDE TO ALLOW GLASS PANEL DOOR TO FULLY OPERATE.

Newport Glass Shower Enclosure Barn Door Installation

STEP 3

STEP 4

POSITION DOOR STOP ON THE RIGHT SIDE OF THE BRACKET TO ENSURE PROPER STOP DISTANCE OF TROLLEY.

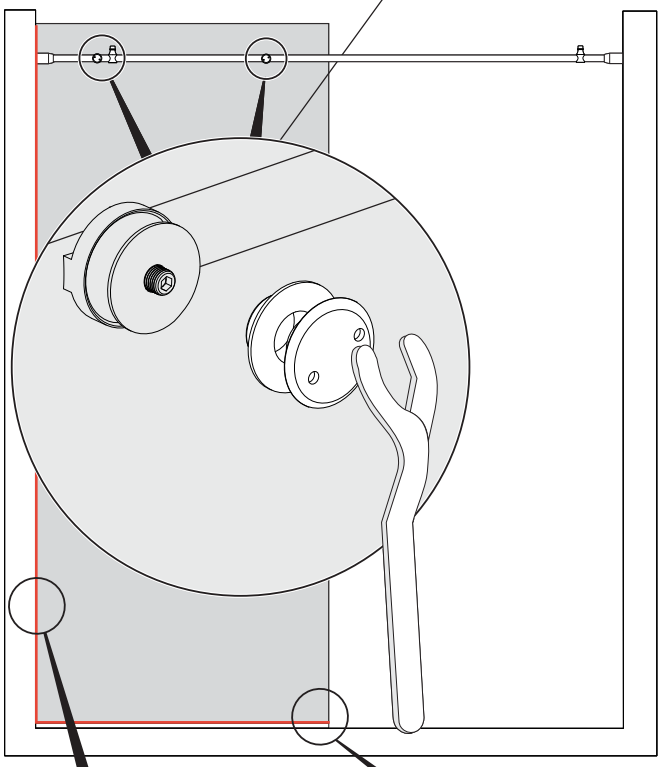

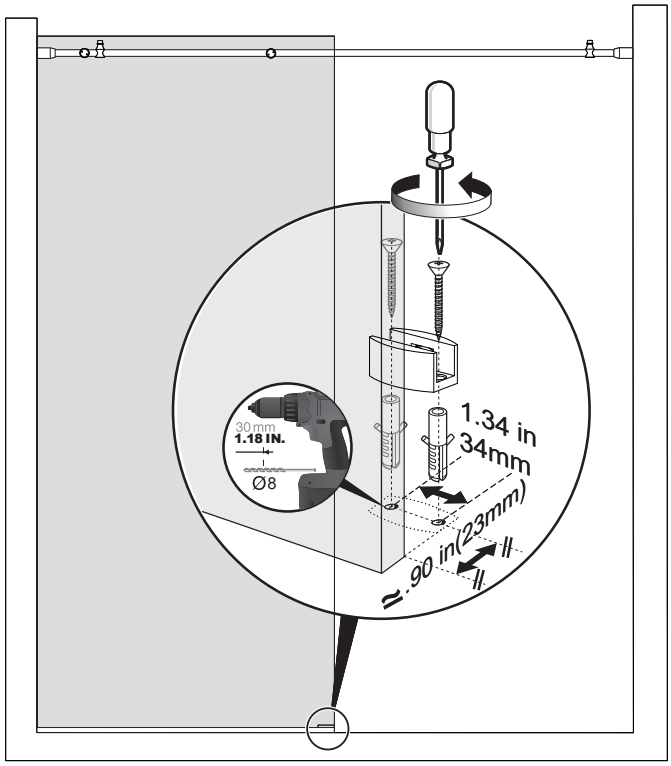

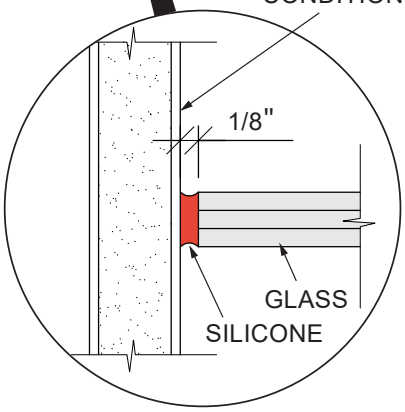

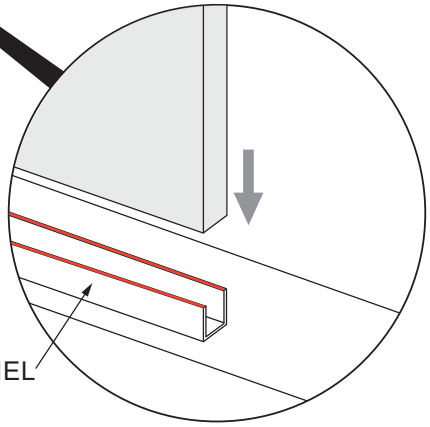

BEFORE HANGING THE GLASS, CUT THE ALUMINUM U-CHANNEL TO THE WIDTH OF THE FIXED PANEL AND HIGH BOND TAPE TO THE FLOOR.
SILICONE BOTH SIDES OF THE U-CHANNEL TO THE GLASS.
ALSO, **SILICONE** GLASS TO WALL ON VERTICAL EDGE.

Newport Glass Shower Enclosure Barn Door Installation

STEP 5

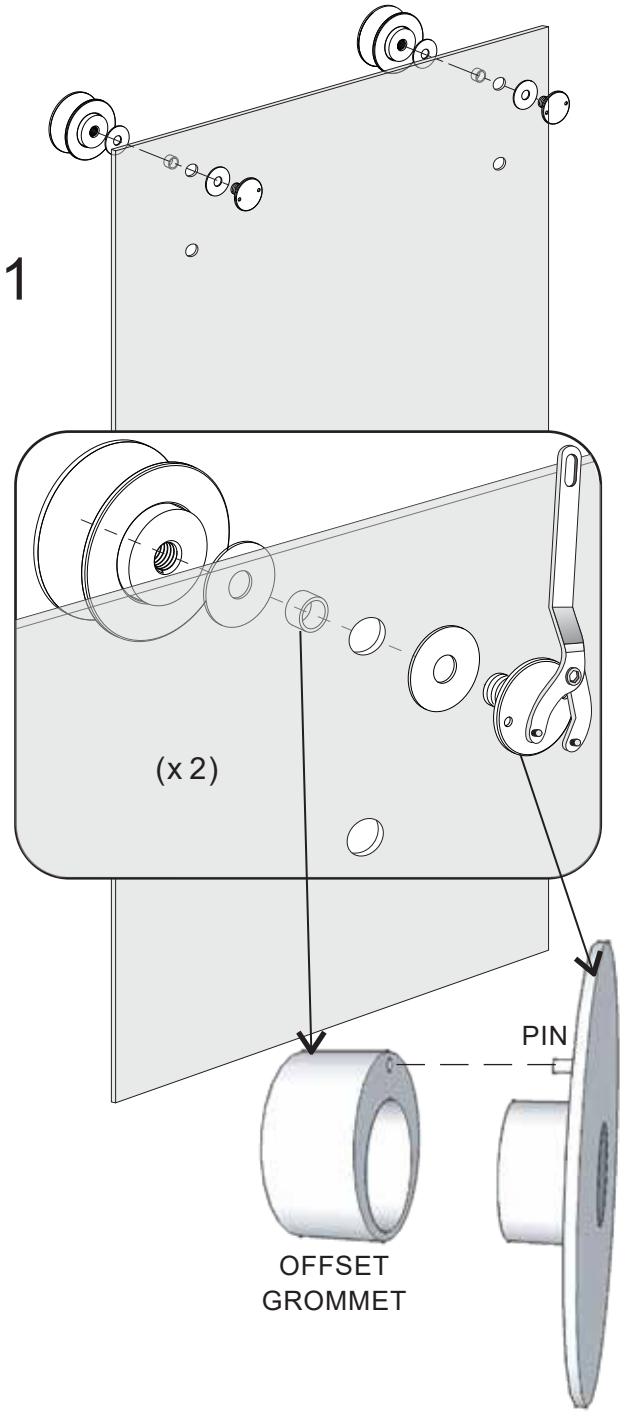

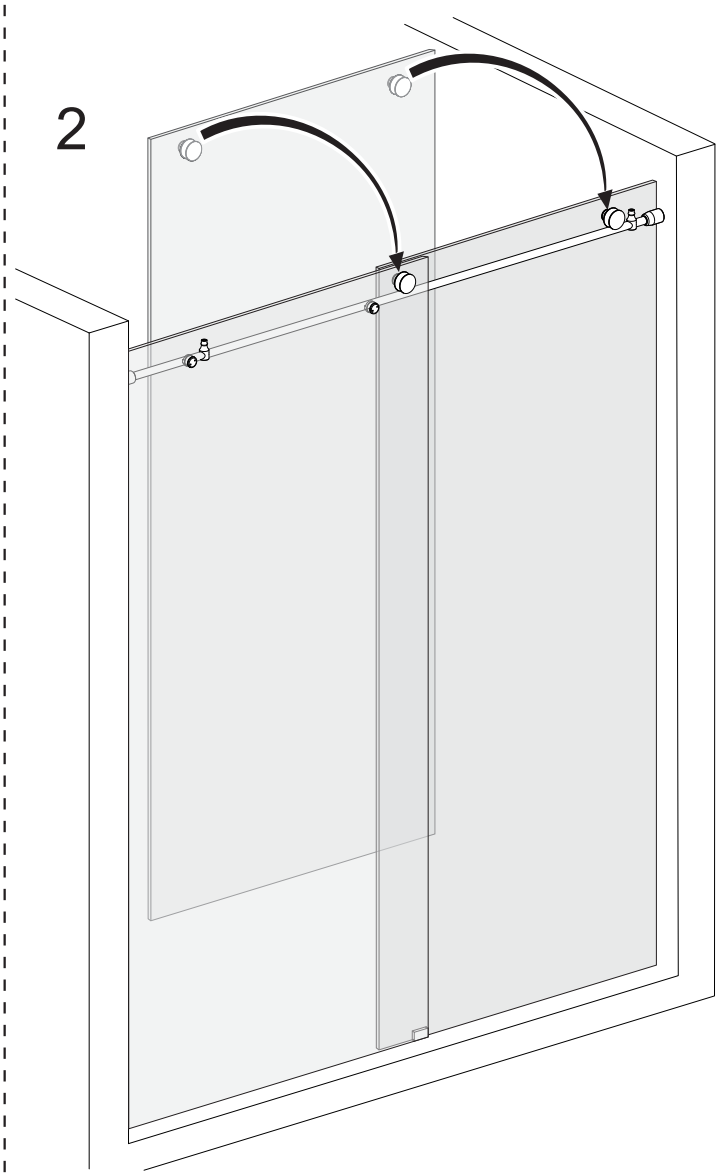

ALL FOUR OF THE BARN DOOR TROLLEYS, INCLUDE AN OFFSET GROMMET THAT IS HELD IN BY A PIN. IN SURE THAT YOU TAKE CARE, NOT TO BREAK THE PIN OFF. THIS GROMMET WILL ENABLE YOU TO ADJUST THE VERTICAL AND HORIZONTAL PLUMB BY ABOUT A 1/4” BY SIMPLY TWISTING THE BACK SIDE OF THE TROLLEY.
(SEE IMAGE TO THE LEFT)

Newport Glass Shower Enclosure Barn Door Installation

STEP 6

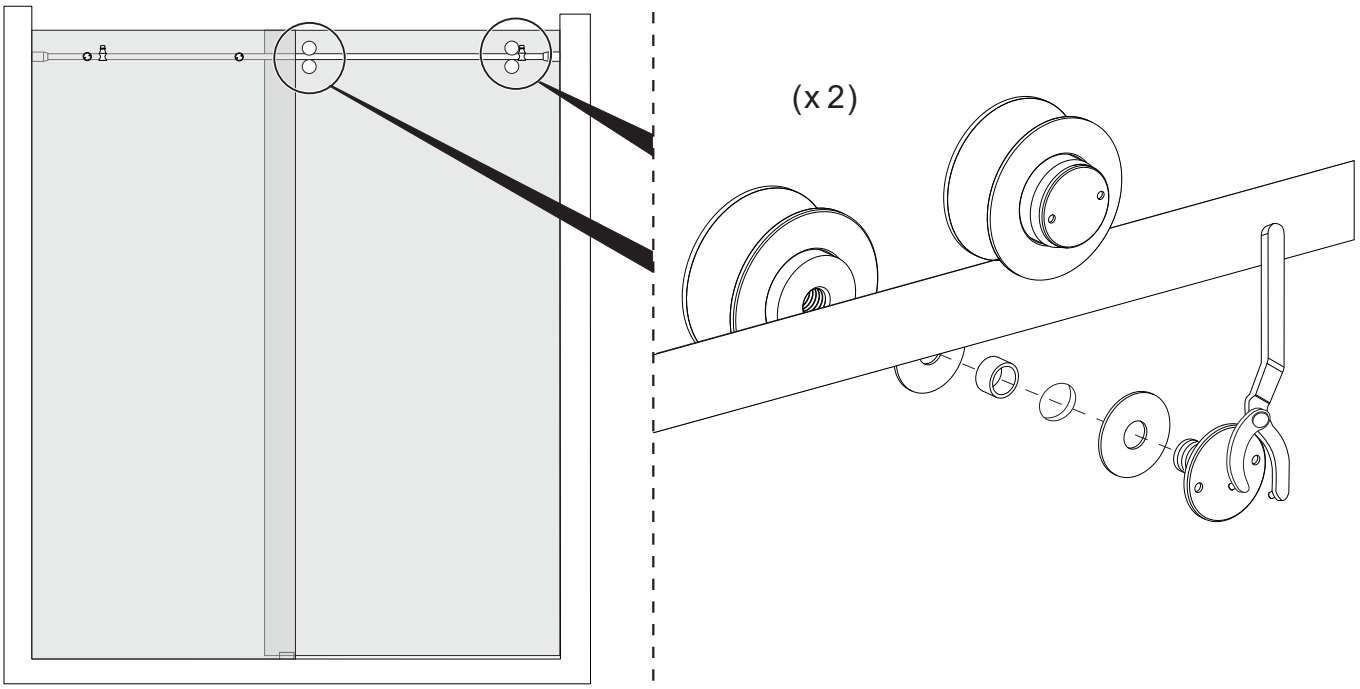

STEP 7

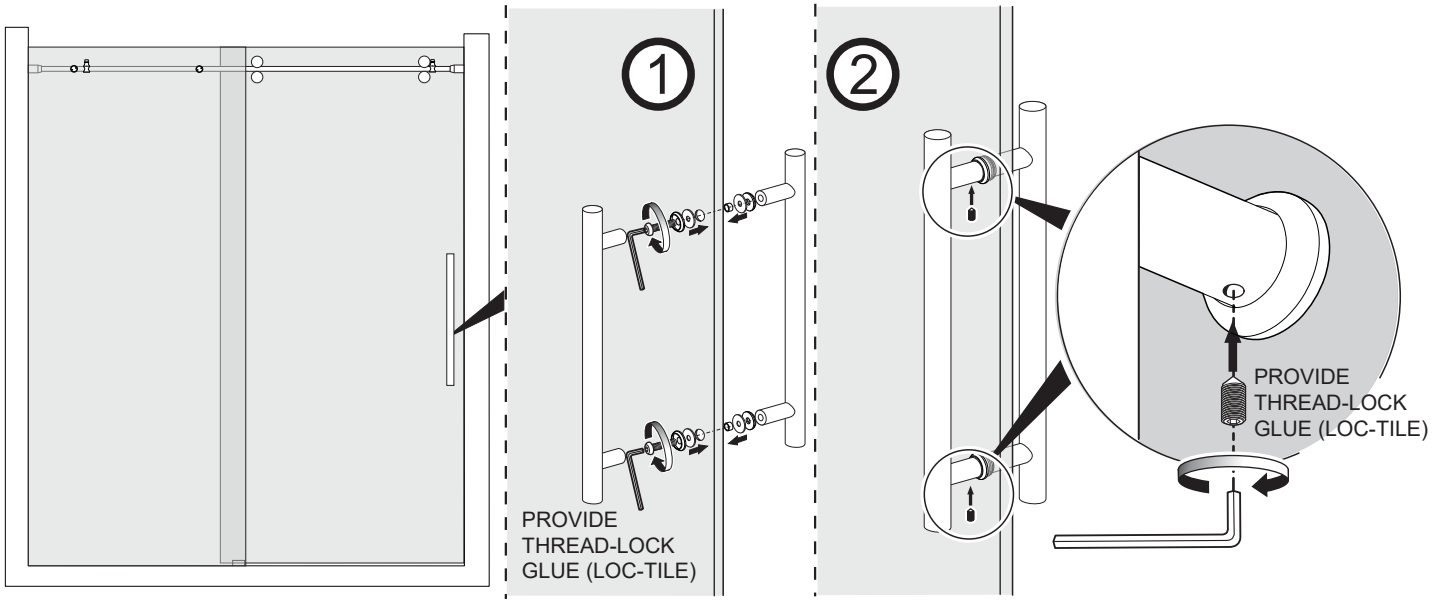

Newport Glass Shower Enclosure Barn Door Installation
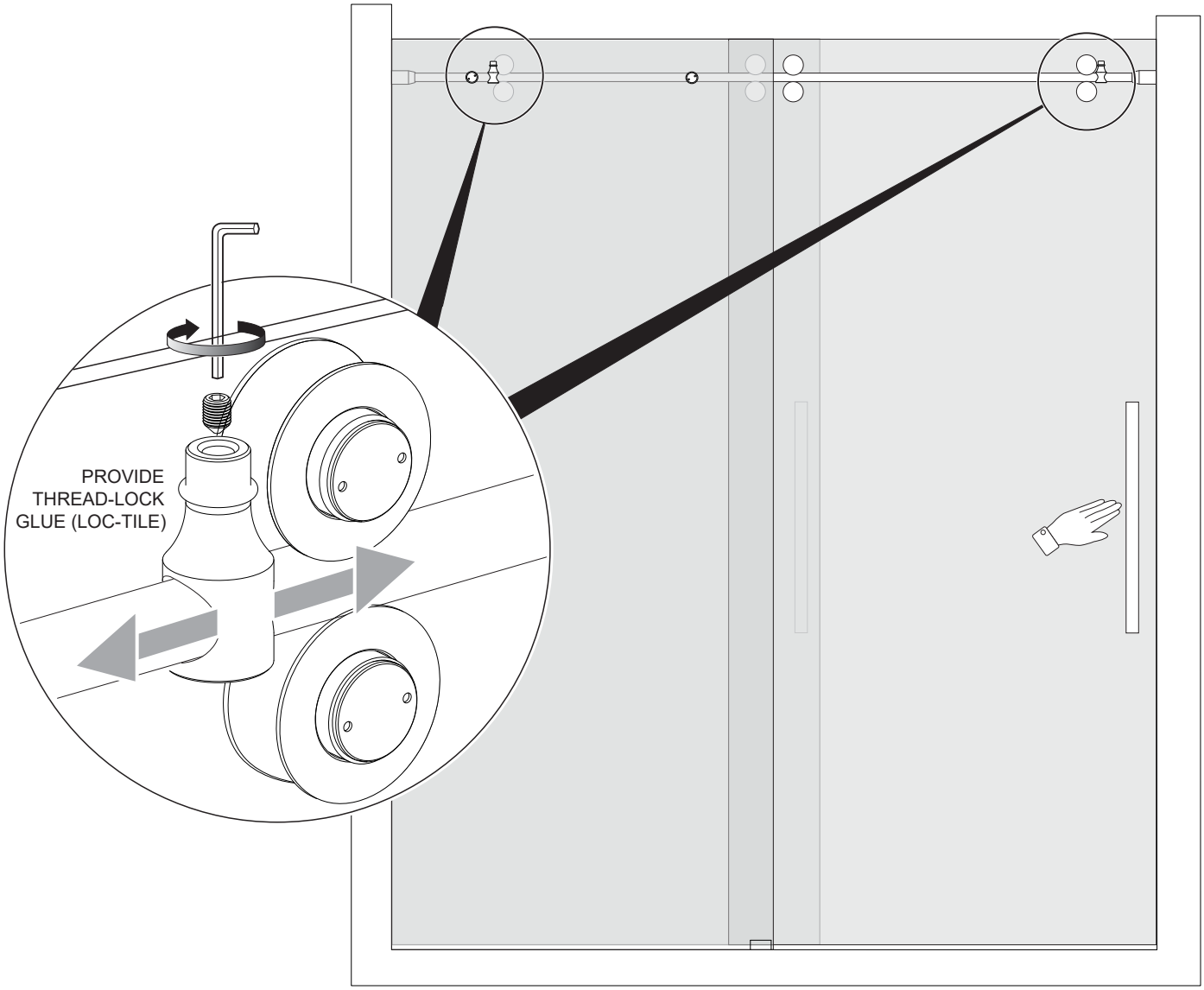
STEP 8