Architectural Concepts

PASADENA

By-Pass Shower Enclosure Installation Instructions

78" OA Height
Fits Standard Opening Range of 54"- 60"

Customization Options Available

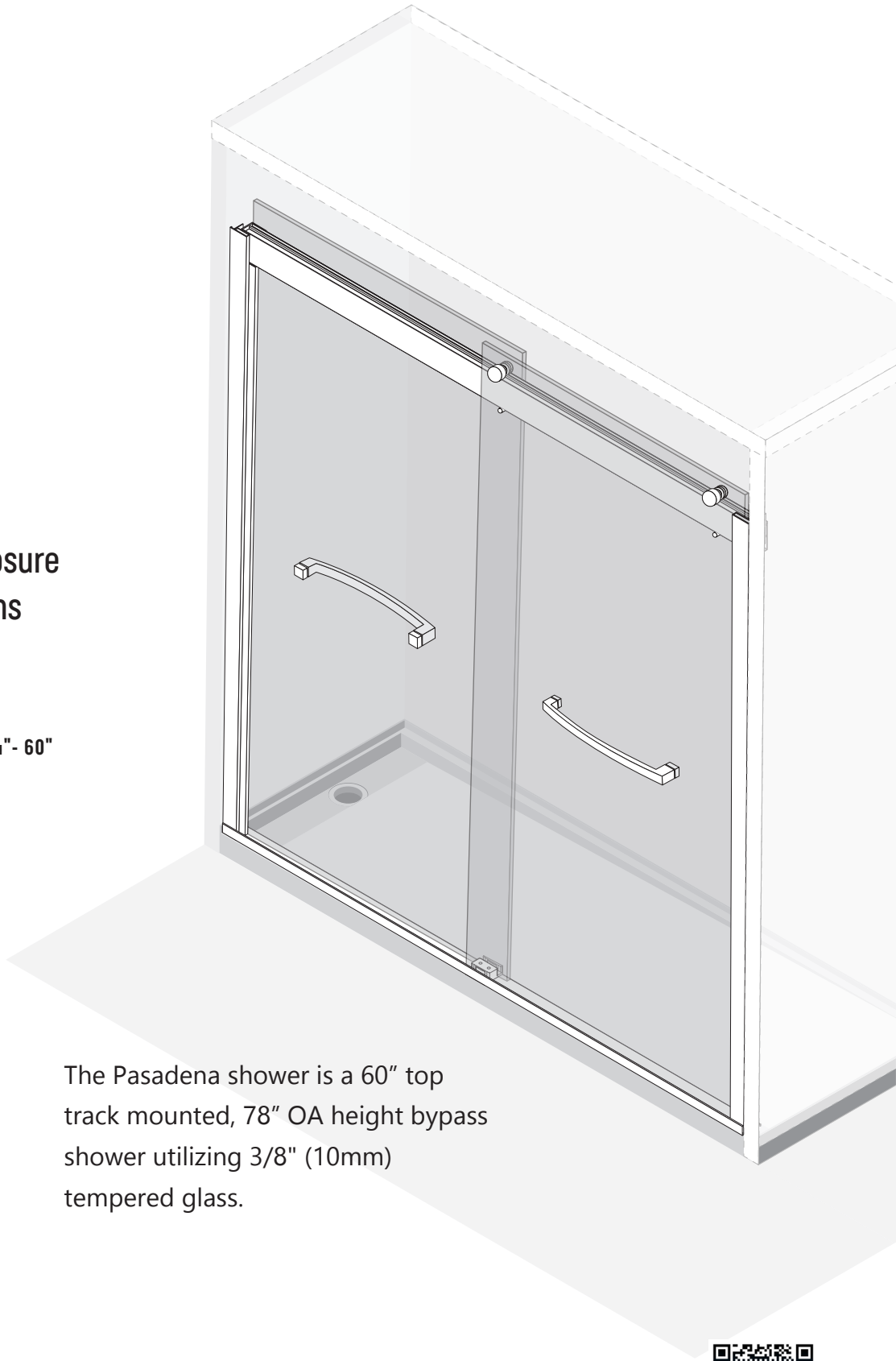

The Pasadena shower is a 60" top track mounted, 78" OA height bypass shower utilizing 3/8" (10mm) tempered glass.

HARDWARE INCLUDED

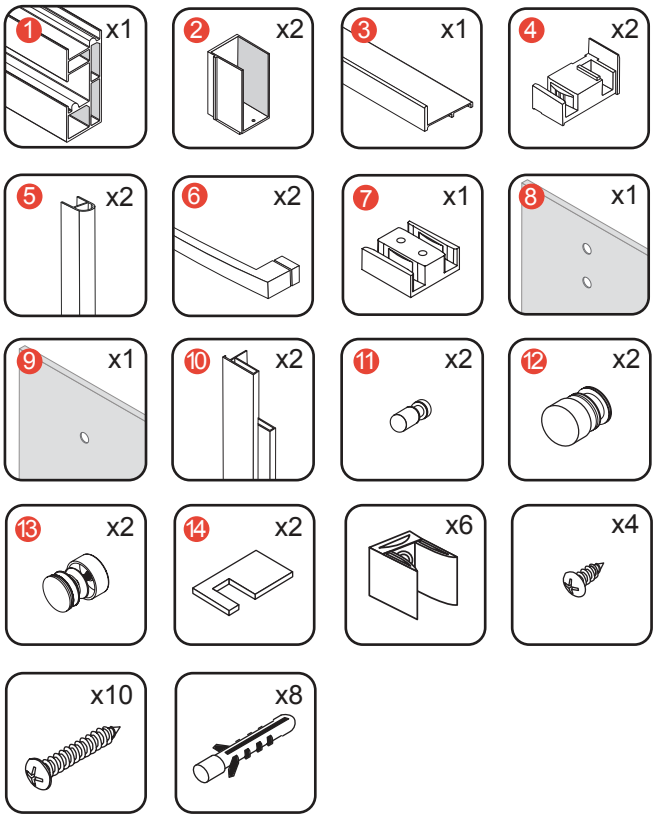

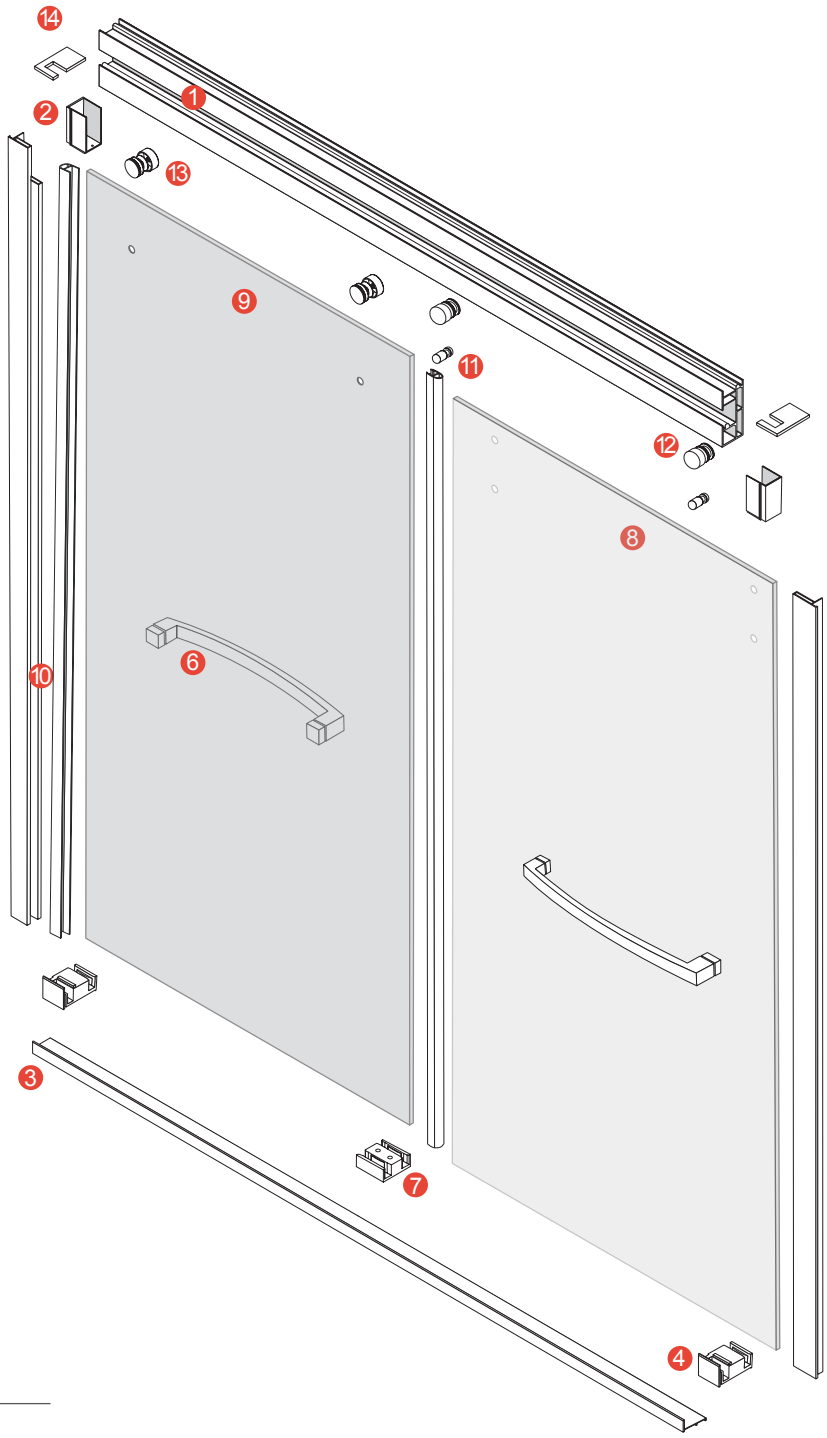

TOOLS NEEDED

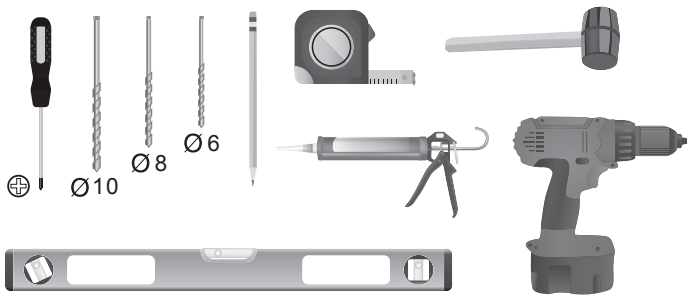

Step 1

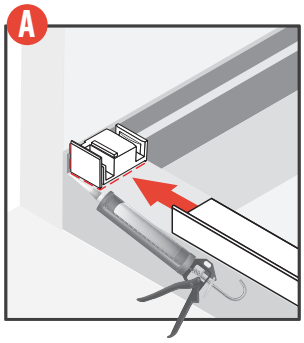

A.1
Position side rail shoe and silicone into place

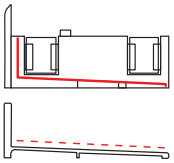

Note the slope alignment when sliding on guide

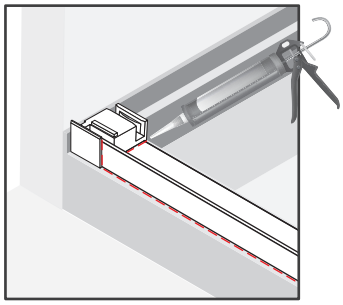

A.2
Insert bottom sill into side rail shoe and silicone into place

If curb/base is out of level more than 1/4", shim as required for proper adjustment

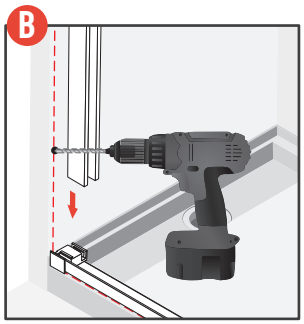

B.1
Measure and drill holes to add wall anchors for side rails

Make sure jambs are installed plumb

Silicone under sill prior to installation

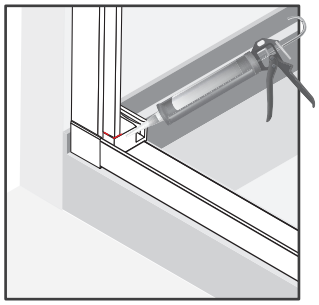

B.2
Silicone inside of corner prior to jamb installation

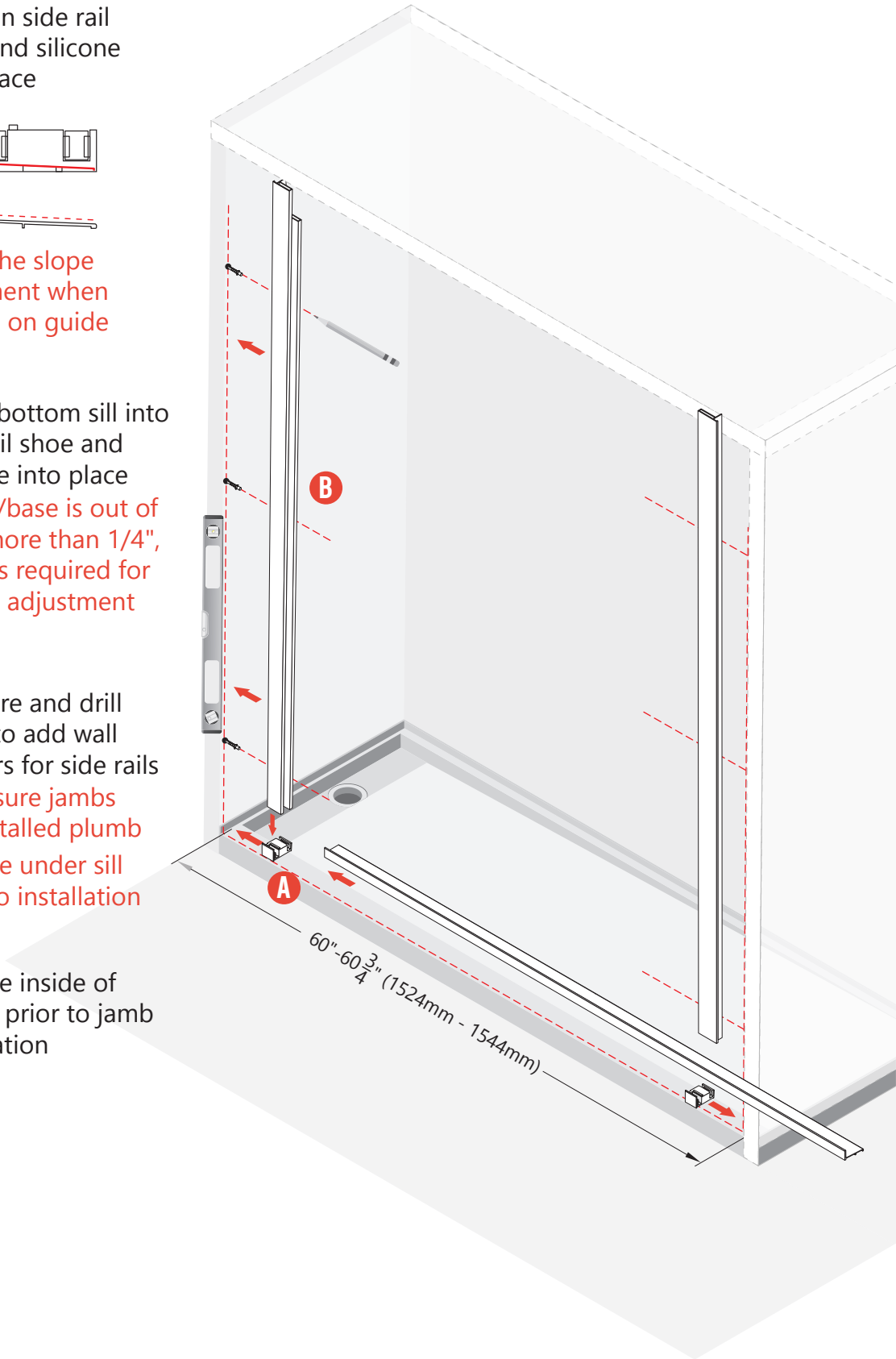

Step 2

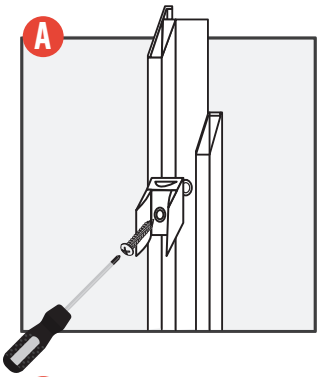

A.1
Install the 3 clips on both side rails

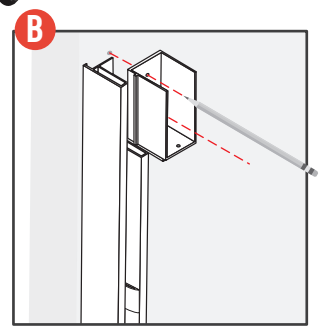

B.1
Measure and mark holes for mounting bracket

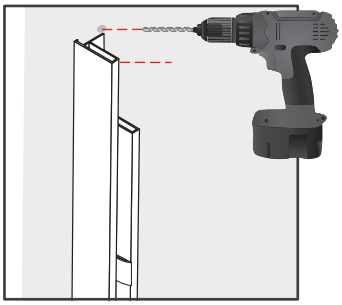

B.2
Drill holes and add wall anchors for top rail brackets

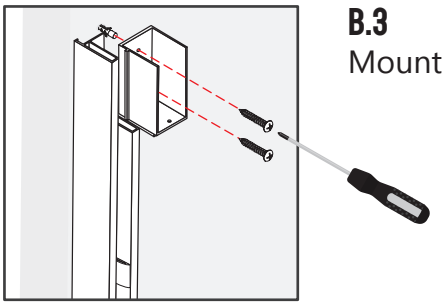

B.3
Mount brackets

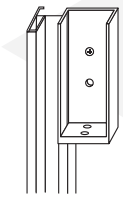

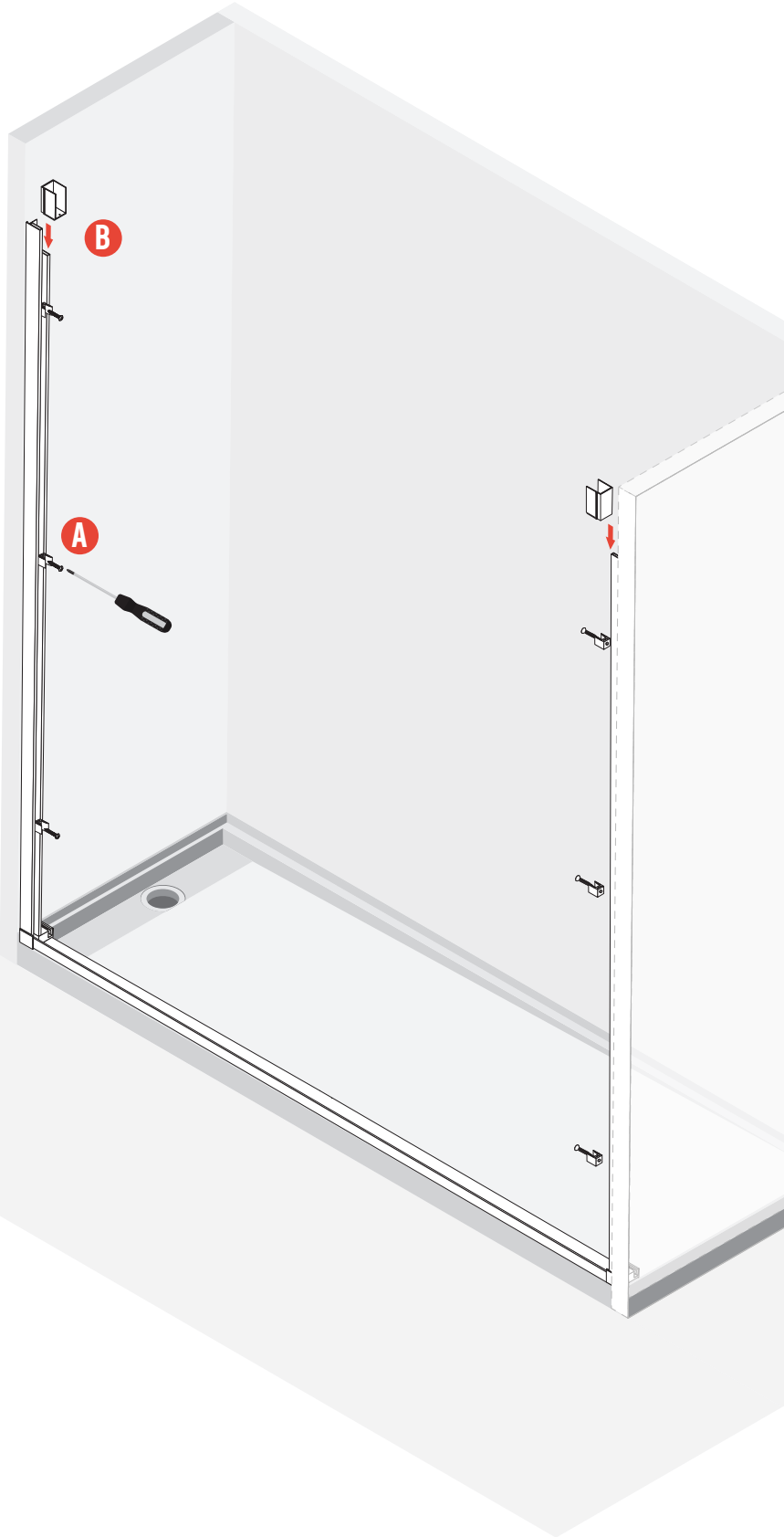

Step 3

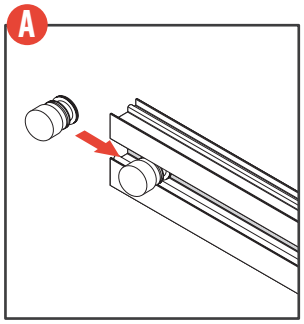

A.1
Insert 2 rollers into back channel before setting top rail onto brackets

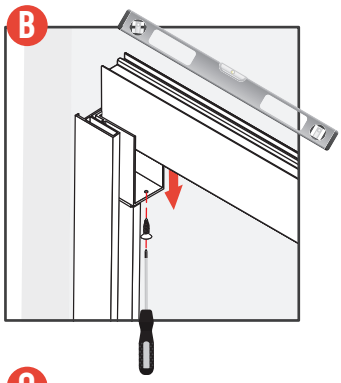

B.1
Drop top rail onto brackets checking for level and insert anchor screw at bottom

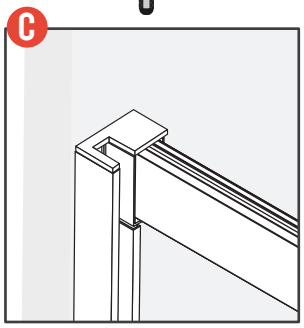

C.1

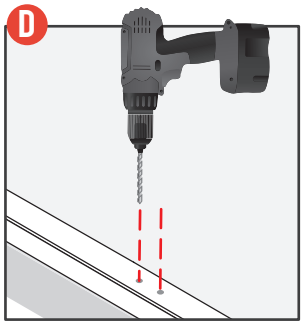

D.1
Drill holes through the sill plate only, not into the shower curb

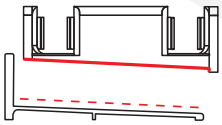

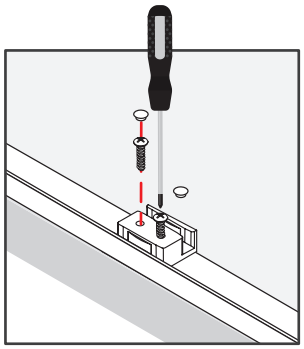

D.2
Mount panel guide

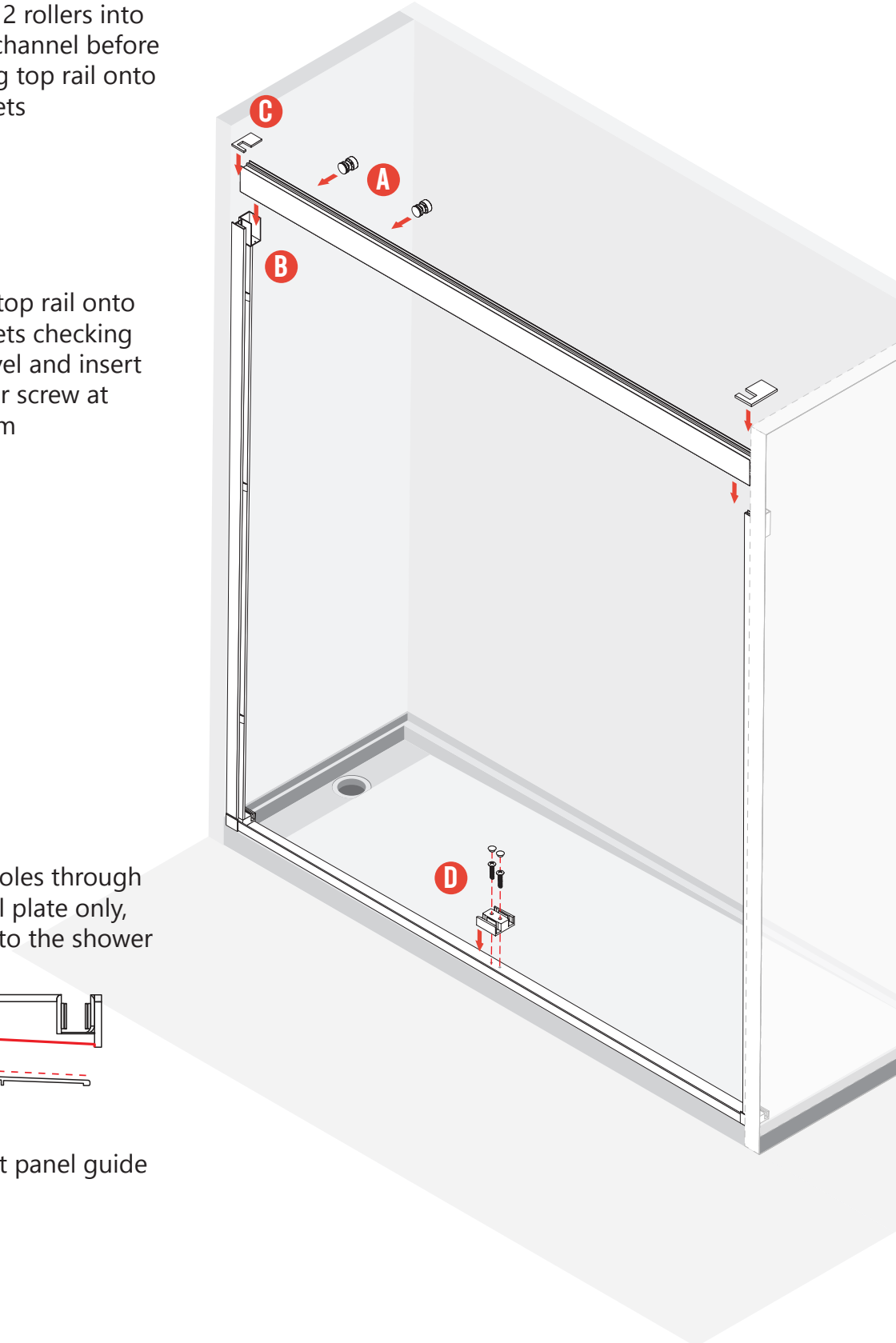

Step 4

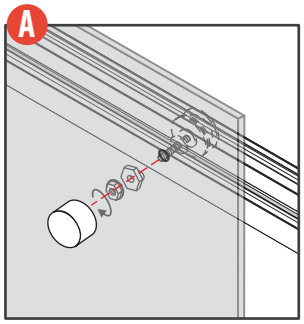

A.1
Connect 2 rollers into inside glass door

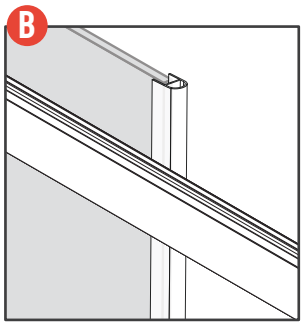

B.1
Attach edge protector to glass door

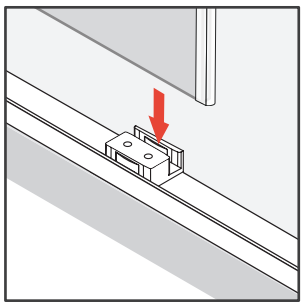

B.2
When attaching glass door to rollers gently align into panel guide

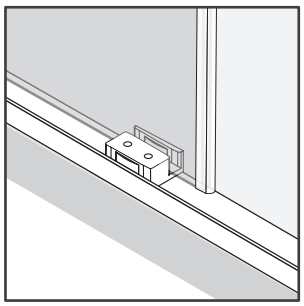

B.3
Ensure glass door glides smoothly within panel guide

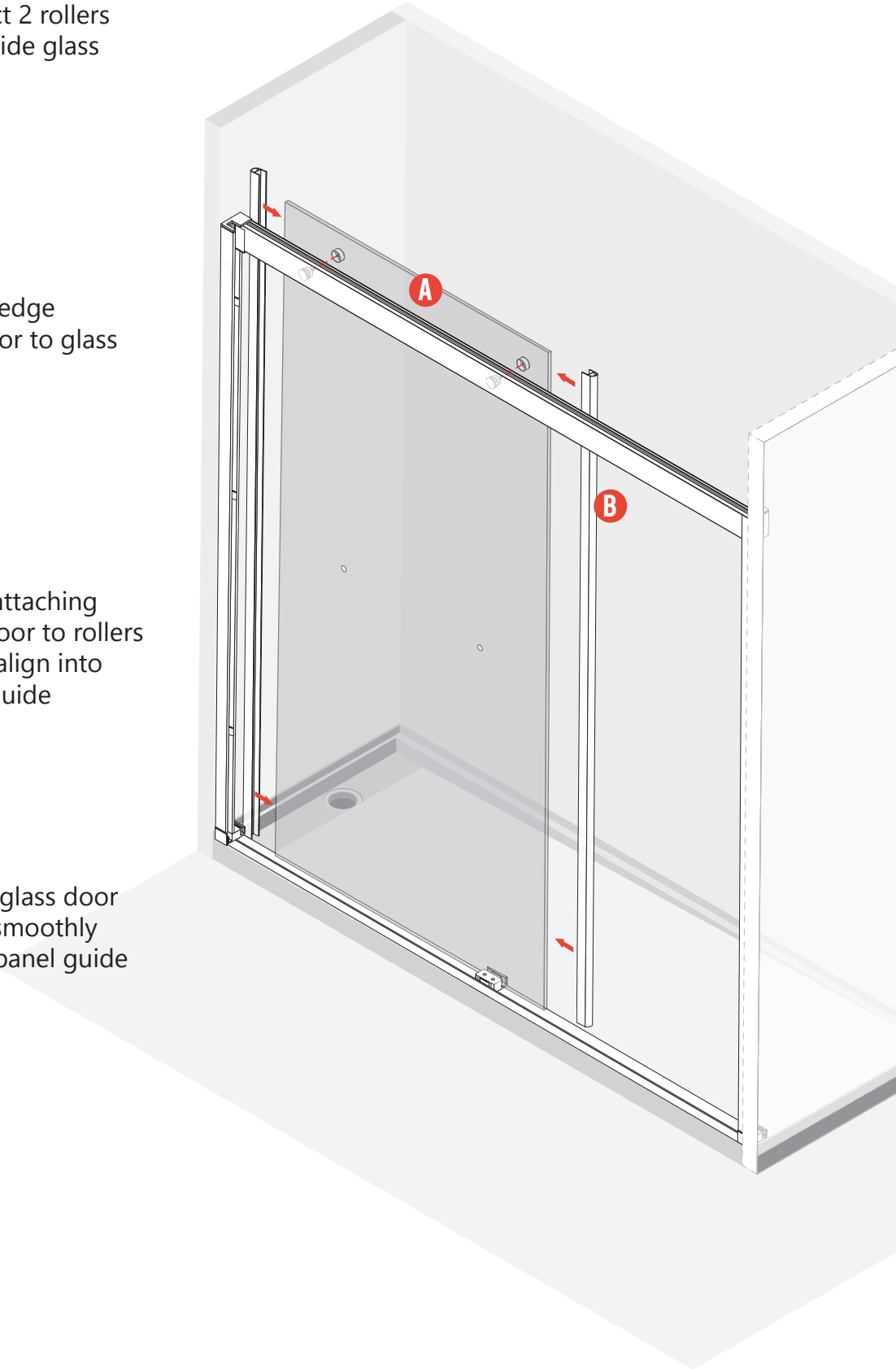

Step 5

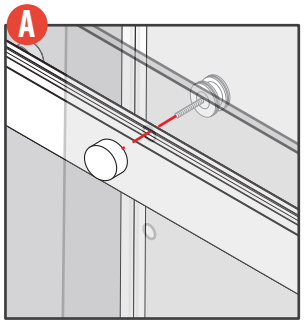

A.1
Connect 2 rollers into outside glass door

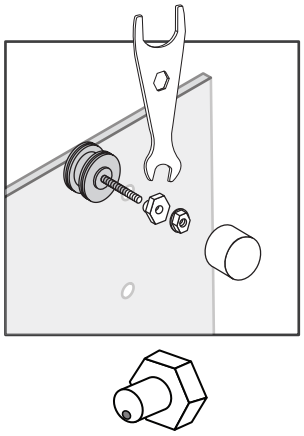

A.2
Adjustment nut to raise and lower door for proper operation and limited space between anti-jump and bottom of track

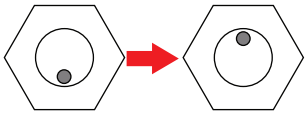

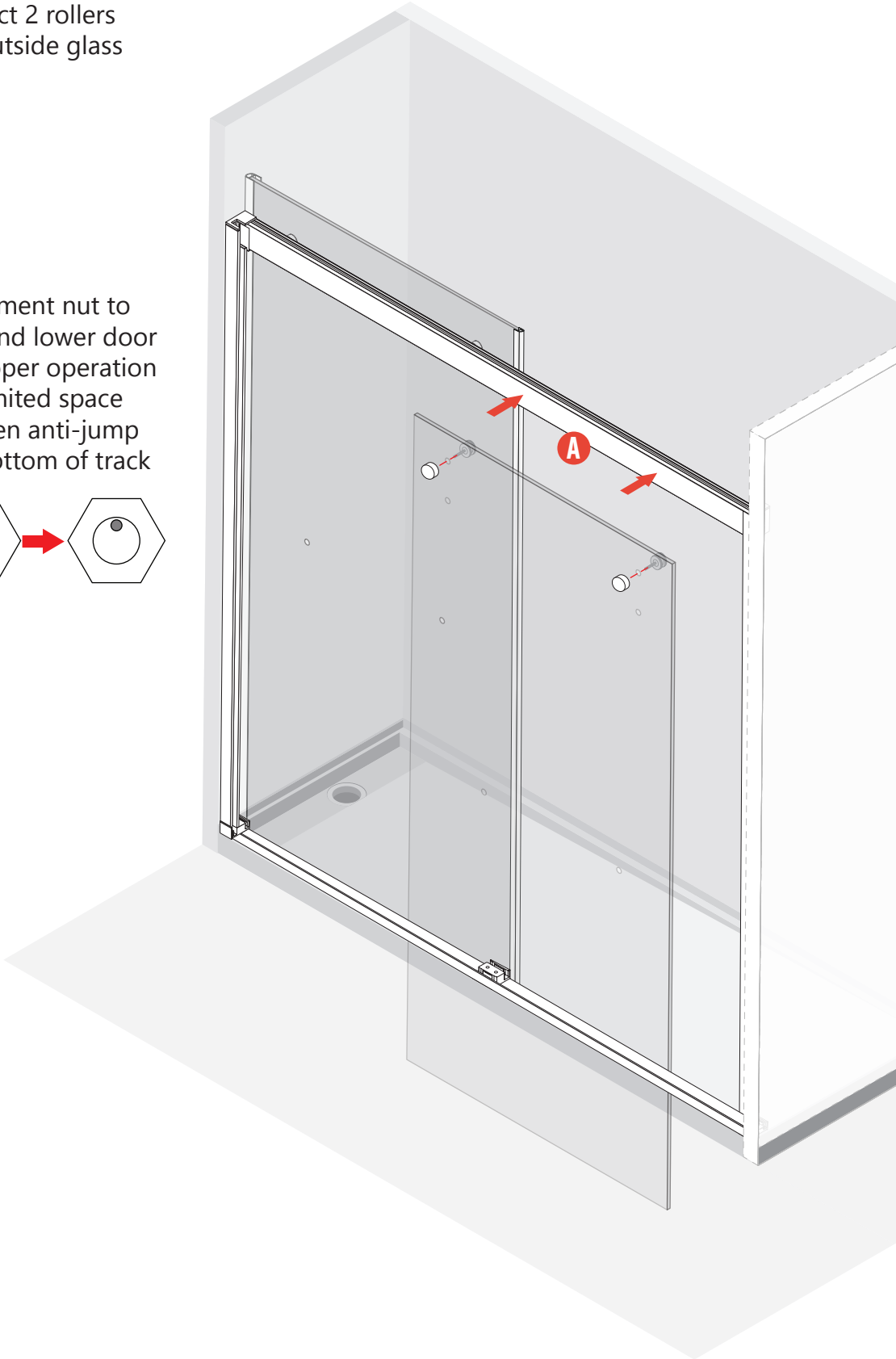

Step 6

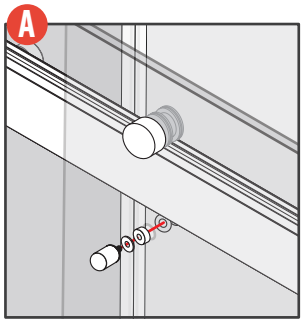

A.1
Connect the anti-jump hardware to the glass door

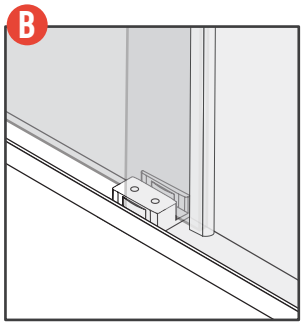

B.1
Ensure glass door glides smoothly within panel guide

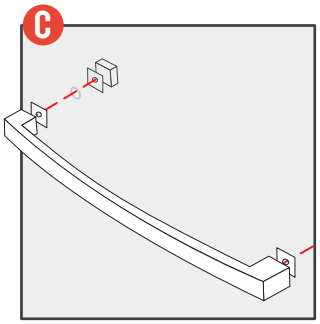

C.1
Attach both towel bar pulls

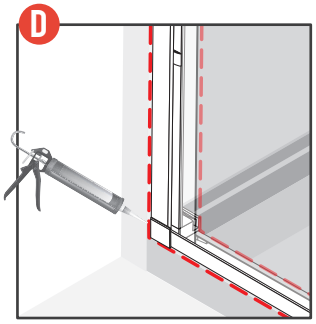
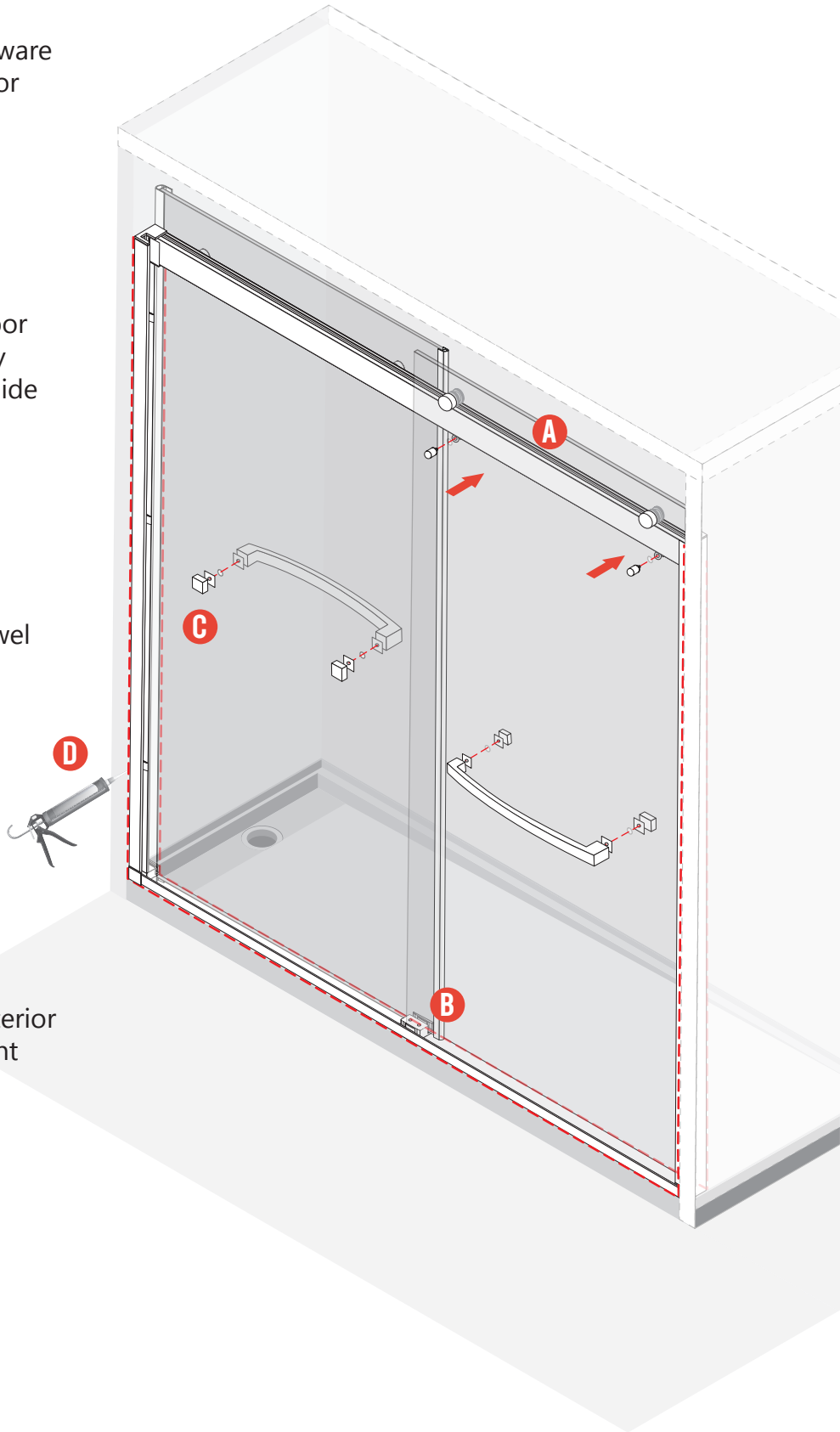
D.1
Apply silicone sealant to the interior and exterior frame to prevent water leakage